Weatherization Works

Weatherization Standards and Technical Manual for the D.C. Residential Conservation Assistance Program

D.C. Energy Office
Chuck Clinton, Director

Government of the District of Columbia
Anthony A. Williams, Mayor

Weatherization
Works

Weatherization Standards and Technical Manual for the D.C. Residential Conservation Assistance Program

Published by the District of Columbia Energy Office

October 2003

INTRODUCTION

The goal of the Residential Conservation Assistance Program, operated by the District of Columbia Energy Office, is to reduce energy costs for low-income families by improving the energy efficiency of their homes while ensuring their health and safety.

This guidebook is designed to provide technical guidance to community-based organizations and contractors for effective weatherization practices. It consists of six sections: Section 1 addresses administrative issues; Section 2 mechanical systems inspection, installation and testing; Section 3 assessing air leakage through the building shell and through ducts; Section 4 air sealing and insulating; Section 5 multi-family buildings administration; and Section 6 pre-audit inspection of centrally heated high-rise multi-family buildings.

The information in Sections 2, 3, and 4 comes from the Weatherization Guidebook for the Mid-Atlantic Region, copyrighted by Saturn Resource Management with the states of Virginia, West Virginia, Maryland, Delaware, Pennsylvania, New Jersey, and the District of Columbia. We thank Saturn Resource Management for giving us permission to include these sections in this document.

From the DC Energy Office, thanks go to Michael Clark, Chief of the Conservation Division; Carl Williams, Weatherization Program Manager; Howard Ebenstein, Energy Program Specialist; and Afewerki Birhane, Energy Program Specialist. A special note of appreciation is extended to Alex Moore of D&R International for his continued support and technical guidance.

TABLE OF CONTENTS

1.0 ADMINISTRATION ***1***

1.1 Effective Date **1**
1.1.1 Measures 1

1.2 Scope **1**
1.2.1 RCAP Service Providers 1
1.2.2 All Measures 1
1.2.3 All Provisions 1
1.2.4 Amendments 1

1.3 Enforcement **1**
1.3.1 Disallowed Costs 1
1.3.2 Noncompliance 2

1.4 Amendments **2**
1.4.1 Changes 2
1.4.2 Immediately Effective Changes 2

1.5 Review/Adoption Cycle **2**
1.5.1 Regular Cycle 2
1.5.2 Proposed Amendments 2
1.5.3 Challenges and Policy Advisory Committee (PAC) 2
1.5.4 Effective Date 3

1.6 Prioritization Standards **3**
1.6.1 Prioritization 3

1.7 Cost Effectiveness **3**
1.7.1 Limit Investment 3

1.8 Weatherization Work **3**
1.8.1 Sound Principles 3
1.8.2 Limit Work 3

1.9 Weatherization Related Repairs **4**
1.9.1 Critical Repairs 4
1.9.2 Repair Rather than Replace 4

1.10 Work Quality **4**

1.11 Completed Unit **4**
1.11.1 Applicability 4
1.11.2 Required Procedures, Retrofits 4
1.11.3 Measures 4
1.11.4 Final Inspection Required 5
1.11.5 File Documentation 5

1.12 Completion Standards **5**

1.12.1 Apply Measures 5
1.12.2 No Removal/Duplication 5
1.12.3 No "Documenting Away" 6
1.12.4 Eligibility Change 6
1.12.5 Denial of Services 6
1.12.6 Codes and Regulations 6

1.13 Training and Technical Assistance 6
1.13.1 Access to Training 6
1.13.2 Obtain Training 7
1.13.3 Apply Training 7
1.13.3 Continuing Education 7
1.13.4 Contractor Training Requirements 7

1.14 Health and Safety 7
1.14.1 Purpose 7
1.14.2 OSHA Requirements 7
1.14.3 Health and Safety Test Requirements 8
1.14.4 Health and Safety Budget 8
1.14.5 Additional Hazard Abatement 9
1.14.5 Health and Safety Concerns 10

1.15 Quality Assurance 10
1.15.1 Service Provider 10
1.15.2 Quality Assurance Elements at the Subgrantee Level 10

2.0 MECHANICAL SYSTEMS INSPECTION, INSTALLATION AND TESTING

2.1 Venting Combustion Gases 12

Standard for CO Action Levels In Ambient Air 12
2.1.1 General Venting Requirements 15
2.1.2 Vent Connectors 16
2.1.3 Chimneys 17
2.1.4 Venting Fan-Assisted Furnaces and Boilers 18
2.1.5 Special Venting System 19
2.1.6 Wood Burner Safety 21

2.2 Combustion Air 22
2.2.1 Unconfined-Space Combustion Air 24
2.2.2 Confined-Space Combustion Air 24
2.2.3 Proprietary Combustion-Air Systems 24

2.3 Measuring Draft and House Pressures 26
2.3.1 Types of Draft in Combustion Appliances 26
2.3.2 Worst-Case Depressurization Test 28
2.3.3 Improving Inadequate Draft 31

2.4 Combustion Safety and Efficiency Testing 32
2.4.1 Gas Burner Safety and Efficiency Testing 32
2.4.2 Leak-Testing Gas Piping 35

2.4.3 Oil Burner Safety and Efficiency 36

2.5 Heating System Replacement Specifications 40
2.5.1 Oil-Fired Heating Installation 41
2.5.2 Gas-Fired Heating Installation 42
2.5.3 Furnace Installation 42
2.5.4 Boiler Installation 44
2.5.5 Electric Furnaces and Heat Pumps 45

2.6 Forced Air System Standards 45
2.6.1 Inspecting Furnace Heat Exchanger 45
2.6.2 Furnace Operating Standards 46
2.6.3 Duct Air-Tightness Standards 47
2.6.4 Duct Insulation 49
2.6.5 Improving Duct-System Airflow 49

2.7 Hydronic Standards 52
2.7.1 Hot Water Space-Heating 52
2.7.2 Steam Heating 54

2.8 Water Heaters 55
2.8.1 Gas-Fired Water-Heater Insulation 55
2.8.1A Electric Water-Heater Insulation 56
2.8.2 Pipe Insulation 56
2.8.3 Electric Water Heater Efficiency 56
2.8.4 Gas Water Heater Efficiency 56

3.0 ASSESSING AIR LEAKAGE THROUGH THE BUILDING SHELL AND THROUGH DUCTS 57

3.1 House Airtightness Testing 57
3.1.1 When Not to Air Seal 58

3.2 Blower Door Testing 59
3.2.1 Preparing for a Blower Door Test 60
3.2.2 Blower Door Test Procedures 61
3.2.3 Building Tightness Limits (BTL) 62

3.3 Pressure Testing Air Barriers 63
3.3.1 Very Simple Pressure Tests 64
3.3.2 Using Manometers to Test Air Barriers 66
3.3.3 Simple Attic Leak Testing 66
3.3.4 Testing Intermediate Zones and Building Cavities 67
3.3.5 Interpreting Zone Pressure 68

3.4 Duct Airtightness Testing 69
3.4.1 Pressure-Pan Testing 69
3.4.2 Blower Door Subtraction 71

3.5 Duct-Induced Room Pressures 72
3.5.1 Measuring Duct-Induced Room Pressures 73
3.5.2 Interpreting Room Pressures 73

4.0 AIR SEALING AND INSULATING 74

4.1 Reducing Air Leakage 74
4.1.1 Sealing Bypasses 75
4.1.2 General Infiltration 78

4.2 Installing Insulation 79
4.2.1 Attic Insulation 79
4.2.2 Blowing Attic Insulation 82
4.2.3 Installing Batt Insulation 82
4.2.4 Finished Attic 83
4.2.5 Wall Insulation 85
4.2.6 Floor Insulation and Foundation Insulation 88
4.2.7 Foundation Insulation 90

4.3 Windows and Doors 92
4.3.1 Exterior Storm Windows 92
4.3.2 Windows Repair and Air Leakage Reduction 93
4.3.3 Door Measures 95

5.0 MULTI-FAMILY BUILDING ADMINISTRATION 97

5.1 General 97
5.1.1 Prior Approval 97
5.1.2 Eligibility 97

5.2 Expenditure Level/Budgeting 97

5.3 Provider Method 97

5.4 Tasks and Analysis for Preparing the Report 97
5.4.1 Energy Consumption and Facility Data 97
5.4.2 Inventory Existing Systems and Equipment 98
5.4.3 Inventory Data 98
5.4.4 List Energy Efficiency Measures 98

6.0 HIGH-RISE/CENTRALLY HEATED MULTI-FAMILY INSPECTION 100

6.1 General Information 100
6.1.1 EA-QUIP Inputs 100
6.1.2 General Required Information 100

6.2 Air Leakage Measurements 101
6.2.1 Blower Door Information 101

6.3 Distribution System 101
6.3.1 Type of Distribution System 101
6.3.2 Pipe Insulation 102
6.3.3 Controls 102

6.4 Domestic Hot Water 102
6.4.1 Occupant Information 102
6.4.2 Water Heater Type 103

6.4.3 Other Information 103

6.5 Appliances 103

6.6 Lighting 104
6.6.1 Incandescent Lamps 104

6.7 Refrigerator Replacement 104
6.7.1 Survey Existing Appliances 104
6.7.2 Replacement Refrigerators 104

6.8 Above-Grade Walls 106
6.8.1 General information 106
6.8.2 Wall Type 106
6.8.3 Wall Insulation 106

6.9 Windows 107
6.9.1 General Information 107

6.10 Exterior Doors 108
6.10.1 General Information 108

6.11 Attic/Roof 108
6.11.1 Attic/Roof Information 108

6.12 Basements 109
6.12.1 Basement Information 109

1.0 ADMINISTRATION

1.1 Effective Date

1.1.1 Measures

All weatherization measures performed or completed by Residential Conservation Assistance Program (RCAP) service providers shall comply with these standards.

1.2 Scope

1.2.1 RCAP Service Providers

For the purpose of these standards, the term “RCAP service providers” applies to all the District of Columbia RCAP service providers, whether direct subgrantees, contractors, or employees.

1.2.2 All Measures

The standards shall apply to all weatherization work performed, measures installed, and health and safety measures completed by RCAP service providers provided any cost of the retrofit is paid for, in part or in full, by the D.C. Energy Office (DCEO) for RCAP.

1.2.3 All Provisions

The RCAP service providers are required to comply with every provision of the standards, unless a waiver of full or partial compliance is granted in writing by the DCEO.

a. **Waiver:** The waiver process is intended to document and substantiate the factual and/or legal basis for routine or continuous non-compliance with the provisions(s) of these standards. The waiver process is intended to notify DCEO, in advance, that the RCAP service providers cannot comply with the provisions of the standards.

b. **Contractors:** Subgrantees will ensure that contractors will comply in every way with these standards, unless a written waiver of full or partial compliance is granted by DCEO.

1.2.4 Amendments

Specific provisions of the standards subsequently amended by administrative, legislative or judicial action shall not negate the force and effect of the remaining provisions of the standards.

1.3 Enforcement

1.3.1 Disallowed Costs

Costs associated with weatherization measures paid for by the subgrantees on or after the effective date of these standards, which do not conform to such applicable standards, are considered disallowed costs by the DCEO.

1.3.2 Noncompliance

Continued subgrantee inability or refusal to comply with applicable standards are grounds for the DCEO to suspend, terminate, or otherwise apply special condition(s) to the subgrantee's agreement to provide RCAP services.

1.4 Amendments

1.4.1 Changes

The standards may be amended and/or revised to reflect changes in state and federal regulations, state-of-the-art technology and wisdom of energy efficiency in existing buildings. Amendments and/or revisions that propose change to the installation of weatherization materials or to program policy shall be open to subgrantee review and comment for a period of not less than ten business days.

1.4.2 Immediately Effective Changes

Amendments and/or revisions shall become effective immediately under the following conditions:

a. **Legal/Regulatory Mandates:** State or Federal law or regulations changes mandate immediate implementation; or

b. **Emergency Situations:** The DCEO determines that an emergency situation exists (such as a potential threat to life, limb or personal property) and that the proposed amendment and/or revision are necessary for the protection of the health and welfare of District of Columbia's citizens.

1.5 Review/Adoption Cycle

1.5.1 Regular Cycle

A regular cycle of amendment proposal, review, discussion/hearing and approval shall be followed for changes to the Weatherization Program Standards (WPS).

1.5.2 Proposed Amendments

DCEO will collect proposed amendments to WPS. All interested parties will be allowed to submit proposals. The proposal shall provide:

a. The existing standard and all related appendices that are proposed to be changed;

b. A supporting statement, including any referenced studies or data; and

c. The proposed amendment and all proposed changes to associated appendices.

1.5.3 Challenges and Policy Advisory Committee (PAC)

DCEO will compile all proposed amendments along with supporting documentation and will make the compilation available to all interested parties for review for a period of thirty calendar days. Challenges to the proposed amendments will be accepted in writing and will be heard on a date set by DCEO.

All proposals and challenges will be heard by a Policy Advisory Committee (PAC) established by the DCEO. The PAC will have ten business days to review the proposals prior to deciding whether to forward the proposals to the DCEO. This committee will determine changes and submit proposed text to the DCEO for final consideration.

1.5.4 Effective Date

Amendments shall become effective as directed in writing by the DCEO.

1.6 Prioritization Standards

1.6.1 Prioritization

Subgrantees are required to apply weatherization measures that have been prioritized based on cost-effectiveness results determined by DOE approved tools such as NEAT for single- family and EA-QUIP for multi-family audits.

1.7 Cost Effectiveness

1.7.1 Limit Investment

Subgrantees will make every effort to limit the nature and extent of RCAP investment in a dwelling unit to only those measures that are critical to the efficiency of the structure and their effect on the health and safety of the occupants.

a. **Greatest Saving to Investment Ratio (SIR):** Subgrantees will ensure that weatherization measures resulting in the greatest energy SIR will be completed as frequently as possible. That means they have to make sure the overall and the individual SIR of the measures to be installed must be 1.0 or greater.

b. **Lowest Cost:** Subgrantees will ensure that the cost of the weatherization materials and application techniques are as low as possible while achieving results consistent with the standards.

1.8 Weatherization Work

1.8.1 Sound Principles

Subgrantees will ensure that all weatherization work on a dwelling unit is based upon proven energy conservation/efficiency principles that are accepted and incorporated into the WPS.

1.8.2 Limit Work

Subgrantees will make every effort to limit weatherization work on a dwelling unit to those measures that improve the energy efficiency of the structure.

a. **Diagnostic Equipment:** Subgrantees will make every effort to base the nature and extent of weatherization upon the accepted use of diagnostic equipment.

b. **Limit Air Leakage Work:** Subgrantees will perform only air leakage sealing work that significantly reduces air leakage rates. Air sealing work shall be directed by blower door diagnostics at every opportunity.

c. **Thorough Insulation:** Subgrantees will make every effort to thoroughly insulate attics, sidewalls and floors over non-conditioned spaces whenever possible.

1.9 Weatherization Related Repairs

1.9.1 Critical Repairs

Subgrantees will ensure that repairs made to a dwelling unit and its mechanical systems are critical to the health and safety of the occupants and the effectiveness of significant weatherization measures.

1.9.2 Repair Rather than Replace

Subgrantees will make every effort to avoid replacing repairable structural or mechanical systems or components of a dwelling unit.

1.10 Work Quality

Professional Work: Subgrantees will complete weatherization measures and repairs in a professional manner.

1.11 Completed Unit

1.11.1 Applicability

The definition and description of a completed unit applies in the case of all units weatherized in whole or in part with RCAP funds unless a waiver has been granted by the DCEO.

1.11.2 Required Procedures, Retrofits

The following list of procedures, retrofits and documentation must be accounted for (consistent with Section 1.6 and 1.12) before a dwelling unit can be reported as complete:

a. **Initial Inspection:** All dwelling units shall have received an initial inspection estimate.

b. **Documentation:** Initial inspection/estimates shall be documented with a complete

   i. Data Collection Form; or

   ii. Printout of the NEAT or EA-QUIP audit results; or

   iii. Inspection form approved by DCEO.

1.11.3 Measures

All dwelling units shall have received the applicable required weatherization measures in accordance with the approved energy audit procedures, all applicable program regulations and policies, and these standards.

1.11.4 Final Inspection Required

All dwelling units shall have received a final inspection by subgrantee personnel.

a. **Documentation:** Final inspections shall be documented with the signature of the inspector and the date of the inspection on the Client Data Sheet.

b. **Final Inspection:** Final inspections shall ensure the following:

   i. All materials reported on the Client Data Sheet and listed on the Monthly Financial Report are present in the dwelling units.

   ii. All weatherization measures performed or completed are safe and effective.

   iii. All weatherization measures identified by the approved energy audit procedure that are required and allowed by applicable program requirements have been accounted for or completed.

   iv. The subgrantees acknowledges and documents that all weatherization measures have been completed. Subgrantees shall not seek or gain customer/homeowner sign off on the customer certification and evaluation form before the unit passes final inspection.

   v. All applicable final diagnostic tests have been performed prior to, or as a part of, the final inspection.

1.11.5 File Documentation

All dwelling units and multi-family buildings shall have complete client file documentation.

1.12 Completion Standards

1.12.1 Apply Measures

Subgrantees shall apply weatherization measures per the documented audit procedure until:

a. **All Measures Done:** All weatherization measures identified by audit procedures that are required and allowed by applicable program requirements are performed or completed; or

b. **Measures Accounted for:** All weatherization measures unable to be performed or completed due to pre-existing health, safety, or technical reasons must be reported to DCEO with in 5 working days. In return, DCEO will determine what action will be taken.

1.12.2 No Removal/Duplication

Subgrantees shall not remove, replace, or duplicate effective pre-existing weatherization measures, which meet the requirements under the appropriate section of the standards.

1.12.3 No "Documenting Away"

Subgrantees shall avoid completing the necessary range of the required weatherization measures by "documenting away" a measure. The subgrantee shall never seek or gain a signed release from the customer to deliberately avoid a weatherization measure or procedure. If a customer refuses to allow a required weatherization measure to be performed or completed, the subgrantee must notify the DCEO to determine if safe, effective and meaningful weatherization services can still be provided. In any case, customer refusal and the date of refusal must be documented in the client file.

1.12.4 Eligibility Change

If, while the unit is in progress, the eligibility of the household changes so that the household is no longer eligible, complete only the weatherization measures in progress to secure the property from possible damage. Do not begin new weatherization measures. The reason for, and date of, the household's ineligibility must be documented in the client file.

1.12.5 Denial of Services

If subgrantee personnel determine that conditions exist which make safe, effective and meaningful weatherization services impossible to perform, the subgrantee may deny services to the household until such time that the conditions are remedied. In this event, the subgrantee must:

a. **Written Determination:** Make a written determination of exactly what repairs or changes must be made to allow weatherization to continue.

b. **Information to Customer:** Provide the customer with the list of repairs/changes along with a subgrantee Denial of Services Form and copy of the appeal procedure.

c. **Reapplication:** Make the customer aware that when the repairs are completed, the customer may request that weatherization resume under the original application. Income update procedures could, however, be necessary if the date of denial and the date of reapplication are separated by more than 6 months.

d. **Other Resources:** By virtue of its advocacy role for low-income persons, make a good faith effort to secure other resources on the customer's behalf to complete any repairs.

1.12.6 Codes and Regulations

Subgrantees shall comply with all applicable state and local building codes and regulations.

1.13 Training and Technical Assistance

1.13.1 Access to Training

Subgrantees will ensure that employees and contractors have access to appropriate information and training that is provided by the DCEO in support of RCAP.

1.13.2 Obtain Training

Subgrantees will ensure that employees and contractors will seek appropriate training and, when necessary, attend training as required by the DCEO.

1.13.3 Apply Training

Subgrantees will ensure that knowledge and skills gained from training will be applied to the operation of the RCAP.

1.13.3 Continuing Education

Subgrantees will ensure that employees and contractors, as weatherization professionals, will seek and use training and technical assistance in order to stay current with up to date weatherization knowledge and skills.

1.13.4 Contractor Training Requirements

All heating contractors must be either state certified or locally certified by an equivalent state test. All weatherization contractors must have blower door training and must follow the WPS for pressure diagnostics testing such as worst-case draft, pressure pan, room-to-room pressure testing, and series leakage zone testing.

1.14 Health and Safety

1.14.1 Purpose

The purpose of this section is to identify health and safety requirements.

1.14.2 OSHA Requirements

a. Subgrantees shall comply with Occupational Health and Safety Administration (OSHA) requirements for all activities that involve staff personnel.

b. Related costs to train and equip staff personnel in order to comply with OSHA requirements shall be charged to the Support or Training and Technical Assistance budget categories, as appropriate.

c. Subgrantees must comply with OSHA regulations concerning administrative procedures directing the collection, maintenance and dissemination of information concerning exposure to, and handling of, hazardous materials.

d. Contractors employed by subgrantees are expected to comply with OSHA requirements. Costs associated with compliance shall be part of the bid price or job cost.

e. Subgrantees costs for complying with OSHA health and safety requirements may be charged to Administrative or Training and Technical Assistance budget categories, as appropriate.

1.14.3 Health and Safety Test Requirements

The following tests are required in the course of performing the audit, work, and post inspection on each building and are designed to find health and safety problems and to insure that weatherization work does not exacerbate any of these concerns. RCAP service providers are also required to conduct periodic inspections of all analytical equipment to assure accuracy and appropriate calibrations as specified by the manufacturer.

1. **Heating System Testing**

    a. **Steady-State Efficiency Testing**: A Steady-State Efficiency test is required on every heating system. During the course of this testing, areas such as unsafe heating systems, carbon monoxide presence, incomplete combustion, and fuel leaks are likely to be detected before any further weatherization work occurs. A tag showing the results of this test must be affixed to the heating appliance.

    b. **Backdraft Testing**: An integral part of the Steady-State Efficiency testing is a draft test to insure that combustion appliances are not spilling combustion gases into the structure. RCAP service providers are required to perform a final back-draft test upon completion of all work on a building in order to insure that the reduction of air flow in the building has not created a condition where combustible gases are spilling into the building after weatherization.

2. **Ambient Air Testing**

    It is also required to test the ambient air in the area where the heating system or any other combustion appliance is located as well as in the living space. These tests are conducted in order to detect and correct significant levels of toxic or combustible gases in the ambient air prior to proceeding with any further weatherization work. Therefore, RCAP service providers are required to complete an air quality checklist for every building weatherized.

3. **Blower-Door Testing**

    All one to 4-unit buildings must be blower-door tested before, during, and after performing air-sealing work on a building. RCAP service providers are required to calculate maximum air sealing goals prior to commencing the work and to show that the building has not been tightened beyond these goals.

1.14.4 Health and Safety Budget

With the exception of Section 1.14.2 above, all costs shall be applied to Health and Safety budget category for allowable health and safety activities that are necessary to abate health and safety hazards before, or because of, the installation of weatherization measures. This includes:

a. The cost to eliminate the presence of hazardous levels of combustion by-products in the living space from a heating or water heating appliance that cannot be otherwise eliminated through routine tune-up or repairs.

b. The cost to repair or replace a non-operational heating or water-heating appliance.

c. The cost to provide a heating or water-heating appliance where none exists.

d. The cost to test and repair a gas cook stove to eliminate or reduce the production of carbon monoxide (CO).

e. The cost to correct the presence of electrical system hazards, such as inadequately sized service, improperly grounded service, hazardously placed service, inadequately sized or insufficient number of circuits, poor condition like exposed wire and wiring inappropriate to its location.

f. The installation of exhaust fans, ducting, controls and passive air intakes that are designed to introduce fresh air to provide a safe and healthy level of air exchange.

g. The installation of smoke alarms and CO alarms.

h. Minor repairs to sewage lines necessary prior to weatherization.

1.14.5 Additional Hazard Abatement

In addition to the hazard correction identified in Section 1.14.3, other hazards may be abated under the circumstances identified below. Costs for these activities shall be charged to the Health and Safety Budget line item.

a. **Asbestos:** The cost of removing and/or abating asbestos is generally prohibited. Where subgrantees work on large heating and distribution systems, including related piping, the cost of asbestos removal is allowable to the extent that documented energy savings resulting from the measure will demonstrate a cost effective SIR. In all cases, compliance with all codes and EPA regulations is required. Cutting asbestos containing siding material remains prohibited. Removal of asbestos siding by a person trained and certified in hazardous materials handling is allowable within EPA and OSHA regulations but only to the extent that savings from the associated insulation retrofit are cost justified by a NEAT audit.

b. **Biological Agents:** The cost of removal or mitigation of molds, odors, viruses, bacteria, unsanitary conditions and rotting wood is allowable to the extent that removal or mitigation is necessary to allow effective weatherization work and/or to provide for the immediate or future health of workers or clients. Whole house extermination of pests is not allowed.

c. **Formaldehyde and VOCs:** The cost of correcting existing indoor air quality problems due to these chemicals is prohibited. However, care

should be taken by the subgrantee not to exacerbate a known existing condition.

d. **Existing Occupant Health Problems:** The cost of treating an existing occupant health problem is prohibited. However, care should be taken to assess if health problems exist and, consequently, to avoid weatherization work or materials that may exacerbate any such problem.

e. **Radon Gas:** The cost of abating radon is prohibited. However, the cost to test a building for the presence of radon gas is allowable if the potential for its presence is believed to be high. Routine weatherization measures that help abate and/or mitigate the existence of radon are allowable as weatherization measures.

f. **Lead Paint:** The cost of lead paint abatement is prohibited. However, the cost to test a building for the presence of lead paint and the cost of precautions to prevent causing a lead paint contamination problem while installing weatherization material is allowable.

   Lead-based paint was used on the majority of houses built before 1978. It is probable that LBP is present on houses weatherized by RCAP that were built before 1978. If lead-based paint is disturbed (cut, scraped, sawn, drilled, etc.) during the weatherization work, that work shall be done in a "lead-safe" manner.

   If the homeowner, landlord, or another person notifies you that there is lead present in the home or that lead poisoning has occurred to a member of the household, then all weatherization work must stop. No other weatherization work can take place until the home is declared lead safe. Section 1.12 (denial of service) must be followed when work is stopped and all documentation must be placed in the client file.

1.14.5 Health and Safety Concerns

Weatherization measures that could potentially affect the health and safety of clients or crewmembers shall be undertaken only after steps are taken to minimize or eliminate risks associated with the retrofit. Those risks include absorption, inhalation or ingestion of hazardous materials. Source control shall be the first approach.

1.15 Quality Assurance

1.15.1 Service Provider

Subgrantees which, as part of their services, are installing energy efficiency measures on residential buildings and which references or requires that work be performed in accordance with these WPS for RCAP must also have a quality assurance program that documents that completed work truly meets the spirit of these standards.

1.15.2 Quality Assurance Elements at the Subgrantee Level

A quality assurance protocol must assure the following:

a. This section (1.15) of the administrative requirements of the program has been met.

b. Completed buildings meet the WPS for RCAP.

c. Completed buildings are operating safely within the confines of the WPS for RCAP.

d. Completed buildings have received a final inspection.

e. Deficiencies discovered during final inspection have been resolved.

f. Invoices or other billings have been completed.

2.0 MECHANICAL SYSTEMS INSPECTION, INSTALLATION AND TESTING

As part of weatherization processes it is the responsibility of RCAP service providers to assess the existing condition of the dwelling unit before the commencement of any work. This includes:

- Inspect and test whether combustion gases are properly vented.
- Inspect and test whether there is enough combustion air.
- Measure draft and house pressures to prevent backdrafting.
- Perform combustion safety and efficiency testing.
- Follow heating system replacement specifications.
- Inspect and test forced air system standards.
- Inspect and test hydronic standards.
- Inspect and test water heaters.

2.1 Venting Combustion Gases

Properly venting combustion gases can protect the health of our clients. One of the main concerns is carbon monoxide (CO). Carbon monoxide is a colorless, odorless, tasteless, toxic and potentially fatal gas produced as a by-product of combustion. Entering through the lungs, it inhibits the blood's ability to carry oxygen to body tissues, including the heart and brain. For ambient air in the area around combustion appliances, the following CO action levels are specified. These levels are based on net indoor ambient readings, i.e., indoor ambient minus outdoor ambient readings. Be aware that one potential source of elevated indoor CO levels is an automobile that may have been idling in the vicinity of the house.

Standard for CO Action Levels In Ambient Air

0 to 9 ppm: This level is normal; no action is needed.
10 to 35 ppm: This level is not itself hazardous, but indicates a problem that must be corrected (exception: levels near properly adjusted gas stoves are often 5 to 15 ppm and require no action). Test combustion appliances one at a time to determine the source of CO production. If an appliance is determined to be the source, it should be reported to DCEO as an emergency (202-673-6741 or 202-671-3308). A recommendation should be made in the audit that the problem be fixed. This must be accomplished before any other weatherization work commences.
36 to 99 ppm: This level is excessive. Inform the occupants, suggest that they step outside, then question

them about their health symptoms. The five common symptoms of CO poisoning are headaches, drowsiness, nausea, dizziness and vomiting. If occupants exhibit any symptoms of CO poisoning, advise them to see a doctor. Re-enter the building and open doors and windows to ventilate the structure. Turn off all combustion appliances until the CO has been reduced to safe a level. If forced air equipment is present, continuous operation of the air handler is recommended at this time. Test combustion appliances one at a time to determine the source of CO production. If an appliance is determined to be the source, it should be shut off and reported to DCEO as an emergency (202-673-6741 or 202-671-3308). The problem must be fixed before any other weatherization work commences.
100 to 200 ppm: This level is dangerous. Inform the occupants, suggest that they evacuate the building, and advise them to seek medical attention. Open all doors and windows that can be done quickly, and disable combustion appliance operation. Continually monitor indoor ambient levels while moving through the building. Once the atmosphere within the structure has returned to a safe level, restore fuel supply to appliances. Operate and test the appliances one at a time to determine the source of CO production. If an appliance is determined to be the source, it should be shut off and reported to DCEO as an emergency (202-673-6741 or 202-671-3308). The problem must be fixed before any other weatherization work commences.
Greater than 200 ppm: This level is very dangerous. Inform the occupants, suggest that they evacuate the building immediately, leaving the door open on the way out. Open all doors and windows that can be done so from outside the building. Advise all occupants to seek medical attention. Do not re-enter the building until conditions have dropped below 100 ppm. Call the Fire Department (911) from a cell phone or neighbor to report the condition and ask them to shut off the gas or oil supply and check for unknown victims. Once the atmosphere within the structure has returned to a safe level, restore fuel supply to appliances. Operate and test the appliances one at a time to determine the source of CO production. If an appliance is determined to be the source, it should be shut off and reported to DCEO as an emergency (202-673-6741 or 202-671-3308). The problem must be fixed before any other weatherization work commences.

In addition to protecting the health of our client, proper venting is essential to operation, efficiency, safety and durability of combustion heaters. Many chimneys and vent connectors have been neglected for decades. Air-tightening the home can weaken draft, and weatherization work can reduce the heaters operating time, resulting in a cooler flue. *See "Combustion Air" in Section 2.2.*

Weatherization should include venting-system inspection followed by maintenance and repair work, if venting problems are discovered.

The National Fire Protection Association (NFPA) is the authoritative source for information on material choice, sizing, and clearances for chimneys and vent

connectors, as well as for combustion air. The information in this venting section is based on the following NFPA documents.

- NFPA 54: The National Fuel Gas Code
- NFPA 31: Standard for the Installation of Oil-Burning Equipment
- NFPA 211: Standard for Chimneys, Fireplaces, Vents, and Solid-Fuel-Burning Appliances 1996 Edition

Table 2.1: Guide to NFPA Standards

Topic	**NFPA Standard and Section**
Venting Sizing	NFPA 54, Part 11
Clearances	NFPA 54, Section 6.3.1, Tables V & VI NFPA 31, Section 4-4.1.1 & Tables 4-4.1.1 & 4-4.1.2 NFPA 211, Sections 6.5, 4.3, 5
Combustion Air	NFPA 54, Section 5.3 NFPA 31, Section 1-9 NFPA 211, Sections 8.5 & 9.3

Atmospheric venting design problems

Gas-fired (natural gas or propane) atmospheric, open-combustion furnaces and boilers usually have standing pilot lights and draft diverters and may be up to 50 years old. The original design of these central heaters creates a disconnection between the chimney draft and the overfire draft at the draft diverter, resulting in a weak and variable overfire draft. This weak draft invites spillage or backdrafting, caused by wind or internal house pressures.

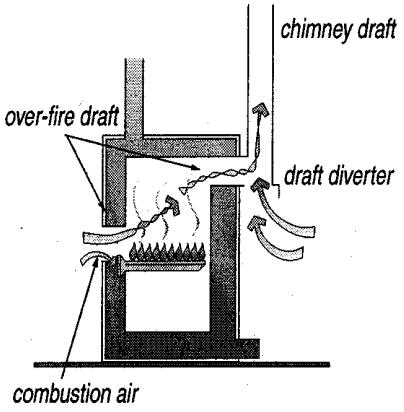

Atmospheric open-combustion : *These gas furnaces and boilers have unregulated draft that can be easily upset by internal house pressures or wind.*

Common gun-type oil burners force air through the heat exchanger into the atmospheric chimney. Their overfire draft is aided by the chimney draft, which is regulated by an adjustable barometric control. The flue gas temperature for oil is usually higher than gas. For these reasons, the draft in oil-

fired central heaters is generally more robust and stable than the draft in atmospheric gas heaters.

Changes in gas heating equipment from low-efficiency older central heaters to mid-efficiency, fan-assisted furnaces and boilers have changed the draft conditions in many chimneys. The newer appliances have lower flue-gas temperatures and less dilution air. Their fans create enough draft to deliver the flue gases to the chimney, where however, they may rise too slowly, cooling beyond their dew point. Another common occurrence is a high-efficiency furnace is vented into a new horizontal chimney, leaving the water heater orphaned in a chimney more than twice its ideal size. These conditions often lead to weak chimney draft, condensation, and rapid chimney deterioration.

2.1.1 General Venting Requirements

Vent connectors and chimney should be virtually airtight at the typical operating draft. Many vent connectors and chimneys, however, are corroded and leaky. Acidic condensation has corroded metal, brick, and fireclay and softened mortar. Mortar and brick dust should be cleaned out of the bottom of the chimney through a clean-out door, so that this debris won't eventually interfere with venting. Corroded vent connectors should be replaced. Deteriorated chimneys should be relined or taken out of service as part of heating-system replacement.

Too large a vent often leads to condensation and corrosion. Too small a vent can result in spillage. The wrong vent materials can corrode or deteriorate from heat.

Verifying the correct size of vent connectors and correctly sizing a chimney liner and selecting the type of venting material are important tasks in inspecting and repairing venting systems. A vent connector is almost always the same size as the vent collar on the appliance it vents. The chimney combining two vent connectors should have a cross-sectional area equal to the area of the larger vent connector plus half the area of the smaller vent connector. The common vent should be no larger than 7 times the area of the smallest vent. These are only general recommendations. *For specific vent sizes, see NFPA codes themselves listed in "Guide to NFPA Standards" on Table 2.1.*

Table 2.1.1: Area of Round Vents

Vent diameter	4"	5"	6"	7"	8"
Vent area (square inches)	12.6	19.6	28.3	38.5	50.2

Vents should have sufficient clearance to combustible materials. Refer to the manufacturers instructions that may be listed on the appliance, or to the appropriate NFPA code, or to the tables presented here.

2.1.2 Vent Connectors

A vent connector connects the venting outlet of the appliance with the chimney. Approved vent connectors for gas- and oil-fired units are made from the following materials.

1. Galvanized-steel pipe (≥ 0.018 inch thick)
2. Aluminum pipe (0.012 inch thick)
3. Type-B vent, consisting of a galvanized-steel outer pipe and aluminum inner pipe (≥ 0.027 inch thick)
4. Type-L vent connector with a stainless-steel inner pipe and either galvanized or black steel outer pipe
5. Stainless-steel pipe (≥ 0.012 inch thick)
6. Various manufactured vent connectors

Clearances for common vent connectors are listed here. Other manufactured vent connectors should be labeled with a clearance to combustibles with a reference to a testing and listing agency.

Table 2.1.2: Clearances to Combustibles for Common Vent Connectors

Vent Connector Type	Clearance
Single-wall galvanized-steel vent pipe	9” (gas); 18” (oil)
Type-B double-wall vent pipe (gas)	1” (gas)
Type-L double wall vent pipe (stainless steel inner liner, stove pipe or galvanized outer liner)	9” or 1” vent diameter or as listed

Gas appliances with draft hoods, installed in attics must use a Type-B vent connector. Type-L vent pipe is used for vent connectors for oil and solid fuels. Type-L has a galvanized or stovepipe outer shell and stainless inner liner. Double wall vent connectors are the best choice, especially for appliances with horizontal sections of vent connector.

The horizontal length of vent connectors shouldn’t be more than 75% of the chimney’s vertical height or 18 inches horizontal run per inch of vent diameter.

Vent connectors should be free or rust, corrosion and holes. Vent-pipe sections should be fastened together with screws. The

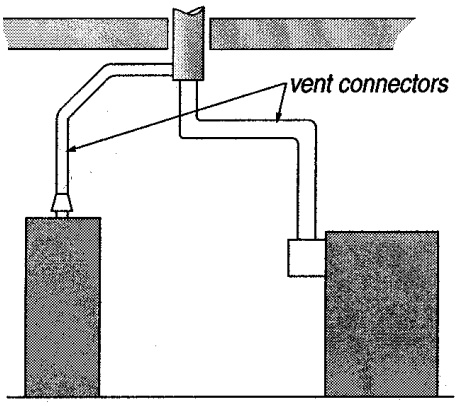

Two vent connectors joining chimney: *The water heater’s vent connector enters the chimney above the furnace because the water heater has a smaller input.*

vent connector should be sealed where it enters the chimney.

Vent connectors must slope upward toward their outlet or to their connection with the chimney at the slope of 1/4 inch of rise per foot of horizontal run along their entire length to prevent condensation from pooling and rusting the vent.

When two vent connectors connect to a single chimney, the vent connector servicing the smaller appliance should enter the chimney above the vent for the larger appliance.

2.1.3 Chimneys

There are several types of chimneys for venting combustion fuels: masonry chimneys lined with fireclay tile or an all-fuel metal chimney. All fuel metal chimneys come in two types: insulated double wall metal pipe and triple wall metal pipe. Type-B vent pipe is permitted as a chimney for gas appliances. Some older manufactured gas chimneys were made of metal-reinforced asbestos cement.

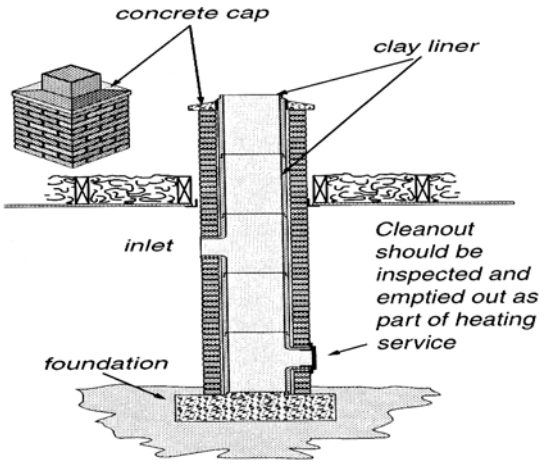

Masonry chimneys: *Remain the most common vent for all fuels.*

Masonry chimneys should be supported by their own foundation. Penetrations through floors and ceilings should be sealed with metal as a fire stop and air barrier.

Masonry chimneys should be lined with a fireclay flue liner. There should be a l/2-inch to 1-inch air gap between the clay liner and the masonry of the chimney to insulate the liner. The liner shouldn't be bonded structurally to the outer masonry because it needs to expand and contract independently. The clay liner can be sealed to the chimney cap with a high-temperature flexible sealant. Masonry chimneys should have a cleanout 12 inches or more below the lowest inlet.

Table 2.1.3: Clearance to Combustibles for Common Chimneys

Chimney Type	Clearance
Interior chimney masonry w/ fireclay liner	2"
Exterior masonry chimney w/ fireclay liner	1"
All-fuel metal vent: insulated double wall or triple wall pipe	2"
Type-B double wall vent (gas only)	1"

Liners for masonry chimneys

Unlined chimneys or chimneys with deteriorated liners should be relined as part of heating system replacement. Use either Type-B vent, a flexible or rigid stainless-steel liner, or a flexible aluminum liner. *See also "Power Venters for Gas-Fired and Oil-Fired Appliances" in Section 2.1.5.*

Flexible liners should be equipped with a connection fitting at the bottom or other effective method of preventing a low spot at the bottom where condensate may accumulate.

If using a flexible metal chimney liner, consider insulating it with vermiculite or a fiberglass-insulation jacket, designed especially for insulating these liners. Flexible liners should always be insulated when installed in exterior chimneys.

Chimney termination

Masonry chimneys should terminate at least three feet above the roof penetration and two feet above any obstacle within ten feet of the chimney outlet. Chimneys should have a cap to prevent rain and strong downdrafts from entering.

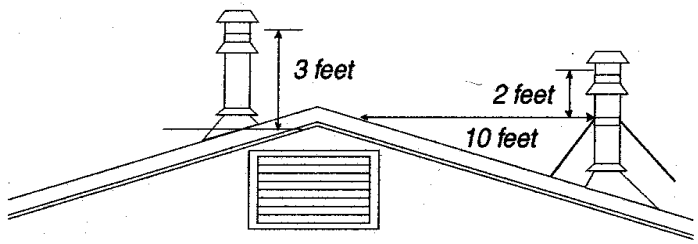

Chimney terminations: *Should have vent caps and be given adequate clearance height from nearby building parts. These requirements are for masonry chimneys and manufactured all-fuel chimneys.*

Type B-vent chimneys can terminate as close as one foot above the roof on flat roofs and pitched roofs up to a 6/12 roof pitch. As the pitch rises from 6/12 to12/12 the minimum termination height rises from 1.25 feet to 5 feet. *For more information see Section 7.6 of NFPA 54.*

2.1.4 Venting Fan-Assisted Furnaces and Boilers

Newer gas-fired fan-assisted central heaters control over-fire draft, flue-gas flow, and excess air better than atmospheric heaters, resulting in their higher efficiency. These are non-condensing furnaces in the 80%-plus Annual Fuel Utilization Efficiency (AFUE) range. Because these units eliminate dilution air and have slightly cooler flue gases, chimneys should be carefully inspected to ensure that they are ready for a possibly more corrosive flue-gas flow. The chimney should be relined when any of the following is present.

- When the existing masonry chimney is unlined.
- When the old clay or metal chimney liner is deteriorated.

- When the new heater has a smaller input than the old one.

In this case the new chimney should be sized to the new furnace or boiler and the existing water heater.

For gas-fired 80%-plus AFUE furnaces, a chimney liner should consist of:

- Type-B vent
- A rigid or flexible stainless steel liner
- A poured masonry liner
- An insulated flexible aluminum liner

Because of the considerable expense that chimney relining can entail, other options should be considered. One option is installing a horizontal chimney with a power venter.

Often the manufacturer has given installers a choice of whether to install the furnace or boiler as a fan-assisted unit, venting into an atmospheric chimney or as a positive-draft appliance, vented horizontally. Some fan-assisted furnaces and boilers are vented horizontally through high-temperature plastic or stainless-steel vent pipe.

Some high-temperature positive-draft plastic vent pipe, used in horizontal installations, has been recalled by its manufacturer because of deterioration from heat and condensation. Deteriorated high-temperature plastic vent should be replaced by air-tight stainless-steel vent piping. Existing fan-assisted appliances may have problems with condensation and weak draft when vented horizontally. Horizontally vented, fan-assisted furnaces and boilers may require a power venter to create adequate draft.

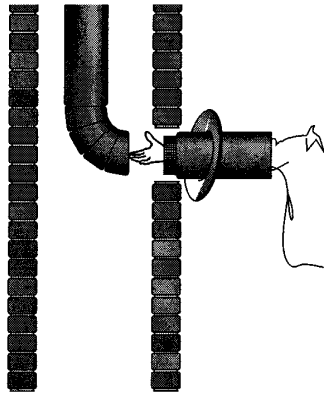

B-vent chimney liner: *Double-wall Type-B vent is the most commonly available chimney liner and is recommended over flexible liners. Rigid stainless-steel liners are also a permanent solution to deteriorated chimneys.*

2.1.5 Special Venting System

Although vertical atmospheric chimneys are still the norm, many gas and oil-fired appliances use different venting options. Some of these offer safety and efficiency advantages over the vertical chimney.

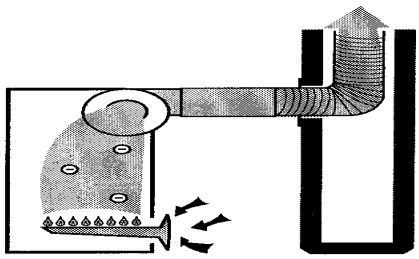

Fan-assisted gas heaters with vertical chimneys: *Are almost always vented into atmospheric chimneys, which may be relined.*

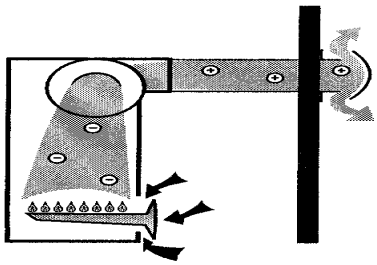

Fan-assisted heaters with horizontal chimneys: *Sometimes these appliances are vented through a side wall through airtight plastic or stainless-steel vent pipe.*

Condensing-furnace venting

Condensing furnaces with 90%-plus AFUEs are vented horizontally through PVC, CPVC, stainless steel, or other materials as specified and/or supplied by the manufacturer. Vent piping should be sloped back toward the appliance, so that its system of condensate disposal and treatment can function.

Combustion air is supplied from outdoors through a sealed plastic pipe or from indoors. Outdoor combustion air is highly recommended, and almost all condensing furnaces are equipped for outdoor combustion air.

Power venters for gas-fired and oil-fired appliances

Power venters install just inside or outside an exterior wall used for horizontal venting. Power venters may give better energy efficiency than existing, unregulated vertical chimneys.

Modern power venters allow fairly precise control of draft through air controls on the their fans. Barometric draft controls can provide even better control when installed either on the common breaching of a two-appliance vent or on each appliance. This more precise draft control minimizes excess combustion and dilution air and can raise combustion efficiency in many cases, when compared to the non-adjustable vertical chimney.

A single power venter can vent both a furnace or boiler and also a water heater. Flue gas temperatures for power venters can be cooler than temperatures needed to power vertical atmospheric chimneys, and the draft can be regulated by the barometric draft control. Type-B or -L vents are good choices for horizontal vent piping, depending on whether the fuel is gas or oil.

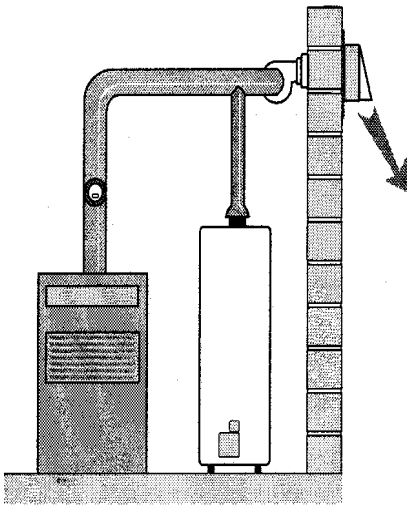

Power venters: *Are an excellent option when the chimney is dilapidated or when no chimney exists.*

Power venters should be considered as a venting option when:

- The cost of lining an unlined or deteriorated chimney exceeds the cost of installing a power venter and horizontal vent.
- Wind, internal house pressures, or nearby buildings have created a stubborn drafting problem that other options can't solve.
- A floor furnace or other appliance with a long horizontal vent connector has backdrafting problems.
- An water heater is orphaned in a too-large vertical chimney when the heating system is replaced by a horizontally venting system.
- An existing horizontally vented appliance has weak draft and/or condensation problems.
- Clients who currently heat with electricity want to convert to gas space heating and water heating but have no chimney.
- High draft in the existing vertical chimney is creating unstable combustion or low steady-state efficiencies in the gas appliances connected to it.

2.1.6 Wood Burner Safety

Wood heating is a popular and effective auxiliary heating source for homes in some regions. However, wood stoves and fireplaces can cause indoor-air-pollution hazards and fire hazards. It's important to inspect wood stoves to assess potential hazards.

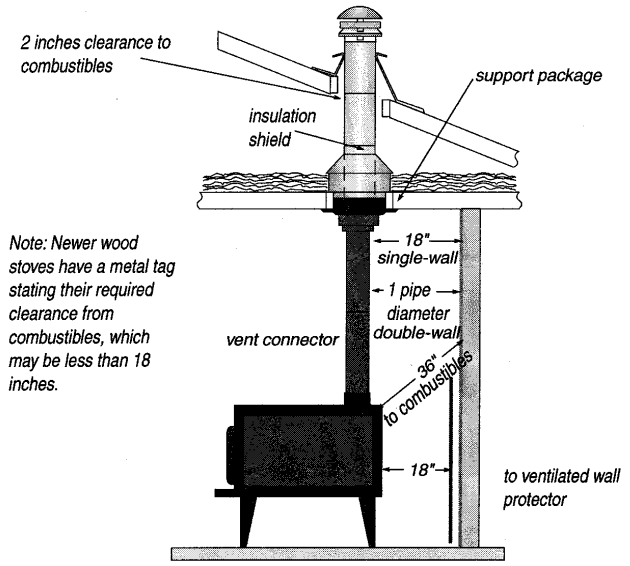

Wood stove installation: *Wood stove venting and clearances are vitally important to wood-burning safety. Read and follow all manufacturer's instructions for the stove and its venting components.*

Stoves that are listed by a testing agency like Underwriters Laboratory have a tag stating their clearance from combustibles. Unlisted stoves should conform to the minimum clearances shown here. Ventilated wall protectors, described in NFPA codes and standards, generally cut the listed clearance in half. *See "Venting Combustion Gases" in Section 2.1.*

All components of wood-stove venting systems should be approved for use with wood stoves. Chimney sections penetrating floor, ceiling, or roof should have approved thimbles, support packages, and ventilated shields to protect combustible materials from high temperatures.

- Inspect stove, vent connector, and chimney for correct clearances from combustible materials as listed in NFPA 211. Ensure that stove is sitting on a noncombustible floor.
- Inspect vent connector and chimney for leaks and seal leaks with a high-temperature sealant designed for use with metal or masonry.
- Inspect chimney and vent connector for creosote build-up and clean chimney if significant creosote build-up exists.
- Inspect the house for soot on seldom-cleaned horizontal surfaces. If soot is present, inspect and replace the gasket on the wood-stove door, if necessary, seal other air leaks, and take steps to improve draft as necessary to reduce indoor smoke emissions.
- Inspect and clean stack damper and/or combustion air intake if necessary.
- Check catalytic converter for repair or replacement if the wood stove has one.
- Assure that heat exchange surfaces and flue passages within the wood stove are free of accumulations of soot or debris.

2.2 Combustion Air

Combustion appliances need a source of combustion air while they are operating. This source must deliver between 15 cfm and 500 cfm of air to the appliance. The lower end of this scale represents small furnaces and space heaters and the upper end represents wood-burning fireplaces or large boilers in multi-family buildings.

Table 2.2: Air Requirement for Combustion Appliances

Appliance	Combustion Air	Dilution Air
Conventional Oil	38	195
Flame-Retention Oil	25	195
High-Efficiency Oil	22	–
Conventional Atmospheric Gas	30	143
Fan-Assisted Gas	26	–
Condensing Gas	17	–
Fireplace (no doors)	100–600	–
Airtight Wood Stove	10–50	–

A.C.S. Hayden, Residential Combustion Appliances: Venting and Indoor air Quality Solid Fuels Encyclopedia

A combustion zone is an area containing one or more combustion appliances. Combustion zones are classified as either unconfined spaces or confined spaces for the purpose of determining whether combustion air can come from the combustion zone or whether combustion air must come from an area – indoors or outdoors – outside the combustion zone. Unconfined spaces are open or connected to enough building air leaks to provide combustion air. Confined spaces are combustion zones with a closed door and confining walls that present an additional air barrier between the appliance and outdoors. A relatively airtight home is itself a confined space and must bring combustion air in from outdoors.

Combustion air is supplied to the combustion appliance in a number of ways.

1. To an unconfined space through adjacent spaces and ultimately from the outdoors through leaks in the building.
2. To a confined space through an intentional opening or openings between the combustion zone and other indoor areas where air leaks replenish combustion air.
3. To a confined space through an intentional opening or openings between the combustion zone and outdoors or ventilated intermediate zones like attics and crawl spaces.
4. Directly to the combustion appliance through a duct from the outdoors. Appliances with direct combustion-air ducts are called sealed-combustion appliances.
5. To the combustion zone or directly to the appliance through a proprietary combustion-air system.

2.2.1 Unconfined-Space Combustion Air

Combustion heaters located in most attics and crawl spaces get adequate combustion air from leaks in the building shell. Even when a combustion heater is located within the home's living space, it usually gets adequate combustion air from air leaks in the building shell unless the house is too airtight or the combustion zone is depressurized. *See "Building Tightness Limits (BTL)" in Section 3.2.3. See "Worst-Case Depressurization Test" in Section 2.3.2.*

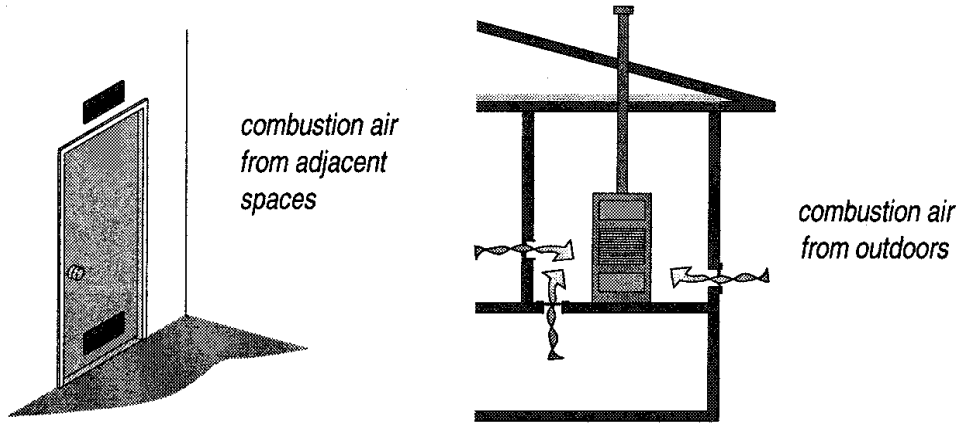

Passive combustion-air options: *Combustion air can be supplied from adjacent indoor spaces or from outdoors according to NFPA 54, The National Fuel Gas Code.*

2.2.2 Confined-Space Combustion Air

A combustion appliance located in a confined space, surrounded by materials that are relatively effective air barriers, may need a vent to an adjacent indoor area, the crawl space, or outdoors. For every 1,000 Btu input, this vent should have 2 square inches (in^2) of free ventilation area. For example, the furnace and water heater are located in a furnace closet. The furnace has an input rating of 100,000 Btus. The water heater has an input rating of 40,000 Btus. There should be 28 in^2 of free ventilation area to the furnace room ([100,000 + 40,000]/1,000 = 14 x 2 in^2 = 28 in^2).

In confined spaces or airtight homes where outdoor combustion air is needed, prefer low inlets to high ones. The preferred installation is to connect the combustion zone to a ventilated crawl space or to some other unheated and non-airtight intermediate zone within the building. For openings connecting the combustion zone with outdoors, choose an outdoor location that is sheltered and that does not sit at a right angle to prevailing winds. Wind blowing at a right angle to an opening tends to depressurize that opening and the combustion zone connected to it.

2.2.3 Proprietary Combustion-Air Systems

Any passive combustion-air inlet can potentially depressurize the combustion zone because pressure from wind or stack effect can exhaust air from the combustion zone instead of supplying air. Several proprietary systems are available that offer better assurance of adequate combustion air. These systems

are particularly appropriate in confined areas, suffering from stubborn problems with draft, combustion-zone depressurization, inadequate combustion-air, or a combination of these problems.

Direct combustion-air supply

Many new combustion appliances are designed for direct out-door-air supply to the burner. These include most condensing furnaces, mobile home furnaces, mobile home water heaters, many space heaters, and some non-condensing furnaces and boilers. Some appliances give installers a choice between indoor and outdoor combustion air. Outdoor combustion air is usually preferable in order to prevent the depressurization problems, combustion-air deficiencies, and draft problems common in atmospheric, open-combustion systems.

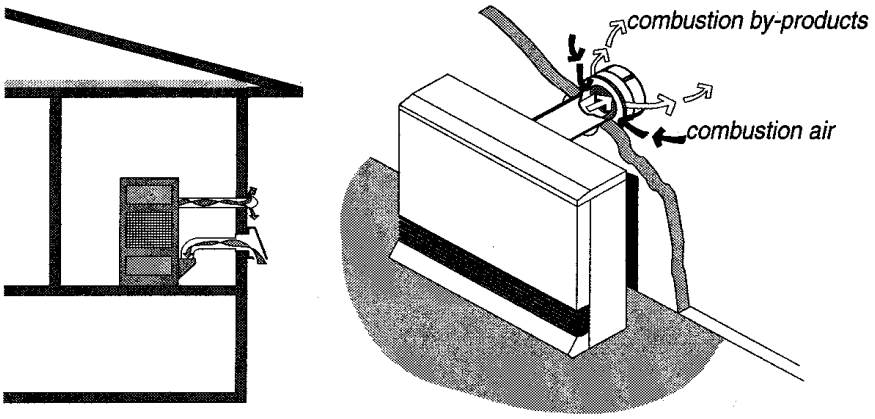

Sealed combustion: *Sealed combustion appliances draw combustion air in and exhaust combustion by-products either using a draft fan or by pressure differences created by the fire.*

Fan-powered combustion air

Field Controls Inc. manufactures a proprietary combustion-air system that introduces outdoor air through a fan that sits on the floor and attaches to a combustion-air duct to outdoors.

Direct combustion air supply to oil-fired heaters

Oil furnaces and boilers can be purchased new or retrofitted with a sealed combustion-air and venting system. The burner fan is fitted with an air boot that feeds the burner with outdoor air. The amount of outdoor air fed to the burner is usually regulated by a barometric damper.

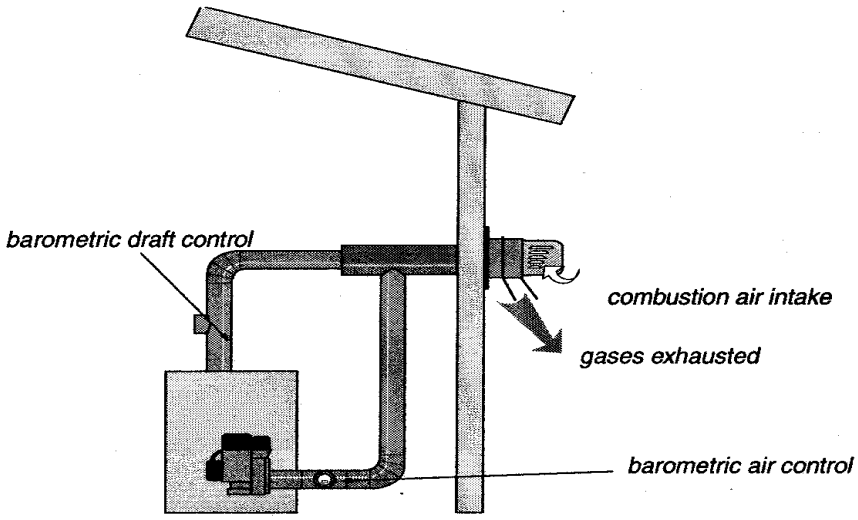

Sealed-combustion oil heating retrofit: *Direct supply of combustion air to gun-type oil burners is a good option for shielding the oil burner from indoor pressures that can't be completely removed.*

Combustion air combined with power venting

Both gas- and oil-fired heating systems can be supplied combustion air by proprietary systems that combine power venting with powered combustion-air supply. The combustion air simply flows into the combustion zone from outdoors. If the appliance has a power burner, like a gun-type oil burner, a boot may be available to supply combustion air directly to the burner as shown here.

2.3 Measuring Draft and House Pressures

The main purpose of measuring draft is to insure that the combustion gases are being vented from a dwelling. Technicians create worst-case conditions for naturally drafting appliances in order to insure that appliances will draft even in the worst-case conditions of house depressurization. Depressurization is the leading cause of backdrafting and flame roll-out. Draft measurements can also give clues about the combustion efficiency of the furnace or boiler.

2.3.1 Types of Draft in Combustion Appliances

There are several different classifications of combustion appliances based on the type of draft they employ to exhaust their flue gases. Most existing appliance exhaust their gases into an atmospheric chimney. An atmospheric chimney produces negative draft (a slight vacuum). The strength of this draft is determined by the chimney's height its cross-sectional area, and the temperature difference between the flue gases and outdoor air. Atmospheric draft should always be negative and never be positive.

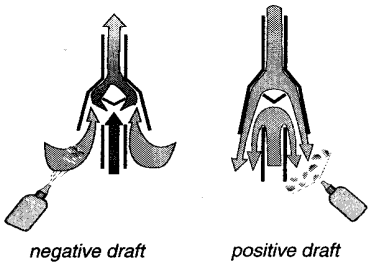

Negative versus positive draft: *With positive draft air flows down the chimney and out the draft diverter. A smoke bottle helps distinguish between positive and negative draft.*

Most existing gas and oil appliance are designed to operate with a negative 0.02 inches of water column (IWC) or -5 pascals chimney draft. Chimneys can produce a wide variety of numbers for negative draft. Tall chimneys located indoors can produce large drafts and short chimneys or cold exterior chimneys typically produce weak drafts.

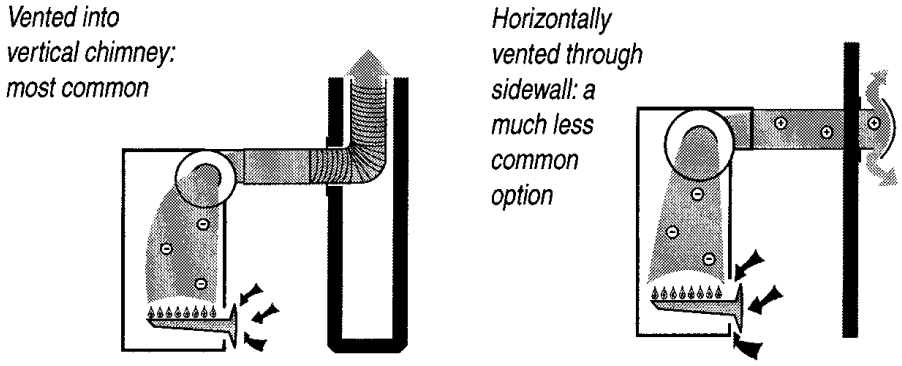

Fan-assisted draft: *Mid-efficiency gas furnaces, boilers, and water heaters are usually vented into vertical chimneys but are occasionally vented through the sidewall through high-temperature plastic vent or a manufactured horizontal chimney.*

Atmospheric combustion appliances exhaust combustion gases solely by their buoyancy. Fan-assisted appliances have the help of a small fan near the exhaust of their heat exchanger that regulates airflow through the heat exchanger and pushes the combustion gases into the chimney.

Power burners have fans at the intake of the combustion chamber to mix combustion air with fuel and inject the mixture into the combustion chamber. The standard gun-type oil bummer is the most common type of power burner. Most appliances with draft-assisting fans and power burners vent into atmospheric chimneys.

Positive-draft appliances, which are either condensing or non-condensing, vent horizontally and require airtight chimneys. Most positive-draft appliances are condensing furnaces and boilers. Most non-condensing positive-draft appliances are boilers, although some furnaces and newer water heaters are also designed to vent through positive-draft, horizontal chimneys.

Power venters with horizontal chimneys are a good alternative, when a vertical chimney is inadequate or non-existent. Yet another venting option is a draft inducer, a fan installed inside a vertical chimney to increase draft.

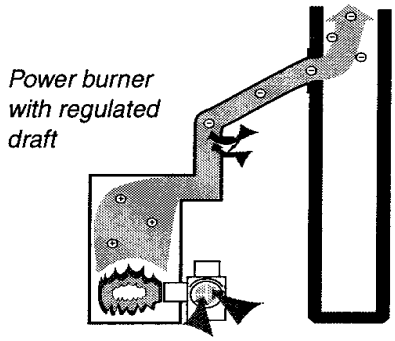

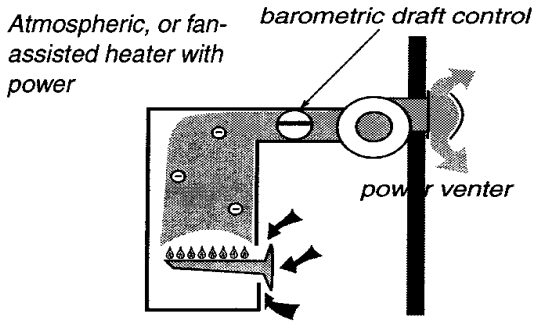

Power-burner draft: *Forced draft furnaces and boilers—most commonly, oil burners—have more robust draft and see less venting problems than natural-gas atmospheric furnaces and boilers.*

Power-vent draft: *A power venter is an external draft-inducing fan that helps atmospheric, and fan-assisted furnaces, boilers, and water heaters vent through a horizontal chimney.*

2.3.2 Worst-Case Depressurization Test

This test uses the home's air handler, exhaust fans, and chimneys to create worst case depressurization in the combustion zone. During this worst-case situation, you measure the indoor-outdoor pressure difference and chimney draft. The worst-case pressure difference is measured: combustion zone with reference to (WRT) outdoors. This measurement is compared with values listed in the table entitled, "House Depressurization Limits" on Table 2.3.2.

Draft is measured chimney WRT combustion zone. Atmospheric-draft gas appliances are draft-tested during the worst-case conditions. This worst-case draft test will discover whether the gas venting system will exhaust the combustion gases when the indoor pressure Conditions are as unfavorable as you can make them. Don't draft test fan-assisted gas appliances or oil-fired appliances during worst-case depressurization because they may malfunction.

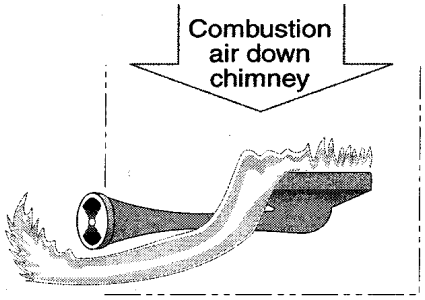

Flame roll-out: *Flame roll-out can occur during times when the combustion zone is depressurized beyond 8 pascals or during very cold weather.*

The reason for these tests is that worst-case conditions do occur and sometimes expose occupants with a severe safety hazards.

A sensitive digital manometer is usually used for accurate and reliable readings of both combustion-zone depressurization and chimney draft.

1. With exterior doors and windows closed, connect a digital manometer to read combustion zone WRT outdoors and record the natural pressure difference at that time.
2. Turn on the exhaust fans, clothes dryer, and air handler; then measure the combustion zone WRT outdoors pressure difference again.

A reading of –3 pascals indicates that there is a significant and possibly dangerous depressurization of the combustion zone.

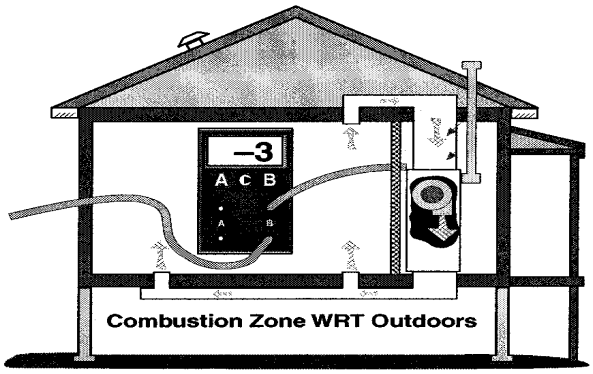

Worst-case depressurization: *Worst-case depressurization testing is used to identify pressure sources that affect draft and combustion air, so that those sources can be reduced or eliminated if the depressurization is excessive.*

3. While air handler and exhaust fans are running, open and close interior doors until the negative pressure difference between the combustion zone and outdoors is at its maximum. Record this maximum or worst-case depressurization value. A combustion zone-WRT-outdoors pressure difference of -3 pascals or more during this test indicates a danger of backdrafting naturally drafted gas and oil appliances. A combustion zone-WRT-outdoors pressure difference of -8 pascals or more indicates a danger of flame roll-out.

4. Operate each gas atmospheric-draft boiler, furnace, or water heater under these same worst-case conditions. Measure draft with a manometer. Test for backdrafting with smoke. Acceptable draft should be reached within 2 minutes of start-up.

5. For all other types of conditions to ensure proper venting of combustion appliances, compare the worst-case depressurization measured in Step 3 above with values in the table presented next.

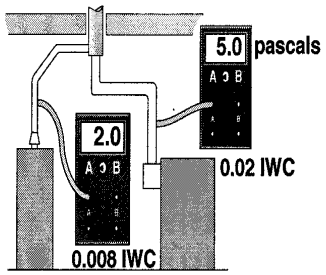

Worst-case draft testing: *Measure draft for atmospheric gas appliances at worst-case conditions to ensure proper venting.*

Table 2.3.2: House Depressurization Limits

Appliance	Chimney height	Unlined exterior chimneys	Lined interior chimneys
Gas-fired furnace, boiler, or water heater	13 or less	5 Pa	5 Pa
	14-20	5 Pa	6 Pa
	>21	5 Pa	7 Pa
Oil-fired furnace, boiler, or water heater	13 or less	4 Pa	4 Pa
	14-20	4 Pa	5 Pa
	>21	4 Pa	6 Pa
Fireplace (wood or gas)	All heights	3 Pa	4 Pa
Airtight fireplace, wood stove	All heights	10 Pa	10 Pa
Fan-assisted gas appliances	All heights/ horizontal	15 Pa	15 Pa

6. Take all necessary steps to identify and remove excessive negative house pressures. *See "Duct-Induced Room Pressures" in Section 3.5.* Also, take appropriate measures to increase draft through chimney improvements, combustion air, or other measures to ensure venting of combustion gases. *For more information, see "Venting Combustion Gases" in Section 2.1 and "Combustion Air" in Section 2.2.*

Ambient CO levels should be monitored in the combustion zone during draft testing, especially if depressurization of the combustion zone exceeds -5.0 pascals during house-depressurization testing. If ambient CO levels in the combustion zone exceed 20 parts per million (ppm), draft tests should cease for the technician's safety. The combustion zone should be ventilated before testing and repair of CO problems resumes.

Naturally drafting chimneys should have -1 to -6 pascals of draft, depending on outdoor temperature-measured chimney with reference to the combustion zone-while at worst case conditions. The lower the outdoor temperature, the higher this negative draft should be. Combustion gases shouldn't spill for longer than 30 seconds from the combustion device while operating at worst-case conditions. *For information on measuring house pressures, see "Measuring Duct-Induced Room Pressures" in Section 3.5.1.*

Table 2.3.2.1: Minimum Negative Natural Draft for Various Outdoor

Outdoor temp	Draft	Draft
Under 20 ^{0} F	0.02 in. W.G	-5 pascals
20 ^{0} F to 40 ^{0} F	0.016 in. W.G	-4 pascals
40 ^{0} F to 60 ^{0} F	0.012 in. W.G	-3 pascals
60 ^{0} F to 80 ^{0} F	0.008 in. W.G	-2 pascals
Above 80 ^{0} F	0.004 in. W.G	-1 pascals

2.3.3 Improving Inadequate Draft

If measured draft is below minimum draft pressures, isolate the reason for the weak draft. Open a window or door to observe whether the addition of combustion air will improve draft. *See "Combustion Air" in Section 2.2.*

Chimney improvements to improve draft

- Repair chimney obstructions, disconnections, or leaks, which can weaken draft.
- Measure the size of the vent connector and chimney and compare to vent-sizing information listed in NFPA 54, Part 11. A vent connector or chimney liner that is either too large or too small can also result in poor draft.
- If wind is causing erratic draft, consider a wind-dampening chimney cap.
- If the masonry chimney is deteriorated, consider installing anew chimney liner. *See "Liners for Masonry Chimneys" in Section 2.1.3.*

Duct improvements to solve draft problems

- Repair return-duct leaks near furnace.
- Isolate furnace from return registers by air sealing.
- Improve balance between supply and return air by installing new return ducts, transfer grills, and jumper ducts. *See "Improving duct-system airflow" in section 2.6.5.*
- Reducing depressurization from exhaust devices.
- Isolate furnace from exhaust fans and clothes dryers by air-sealing between the combustion zone and zones containing depressurizing forces.
- Reduce capacity of large exhaust fans.

Combustion and make-up air

- Provide makeup air for dryers and exhaust fans.
- Provide combustion-air inlet to combustion zone. *See "Combustion Air" in Section 2.2.*

2.4 Combustion Safety and Efficiency Testing

This combustion efficiency section specifies maintenance, repair, and efficiency improvements to the combustion systems of existing heating appliances. Procedures outlined here require training, skill, experience, and knowledge of the health and safety hazards associated with combustion heating systems.

For oil-fired systems there is opportunity for significant energy savings by adjustments to the combustion system. For gas, there is less opportunity.

For both oil and gas, safety testing is extremely important. Heating systems with their burners, heat exchangers, and chimneys are often neglected for decades at a time.

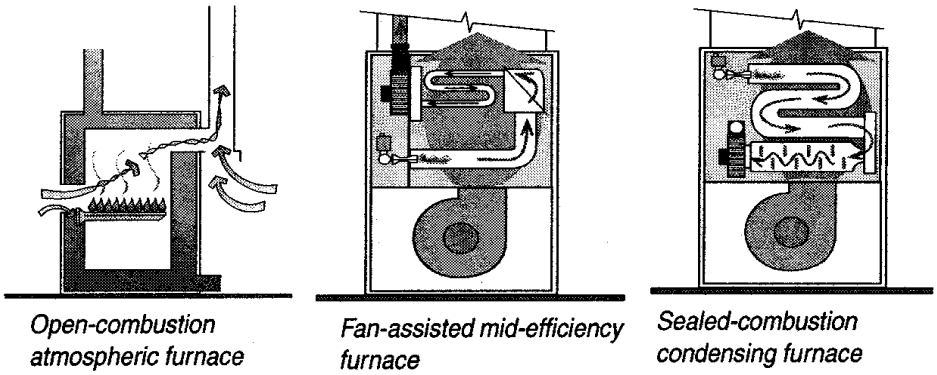

Gas furnace evolution: *Gas furnaces have evolved from natural draft low efficiency, to fan-assisted medium efficiency, to sealed-combustion condensing high-efficiency furnaces.*

2.4.1 Gas Burner Safety and Efficiency Testing

Gas burners generally don't need annual maintenance. Once properly adjusted, a gas burner will usually operate well for many years. These following specifications apply to gas furnaces, boilers, water heaters, and space heaters.

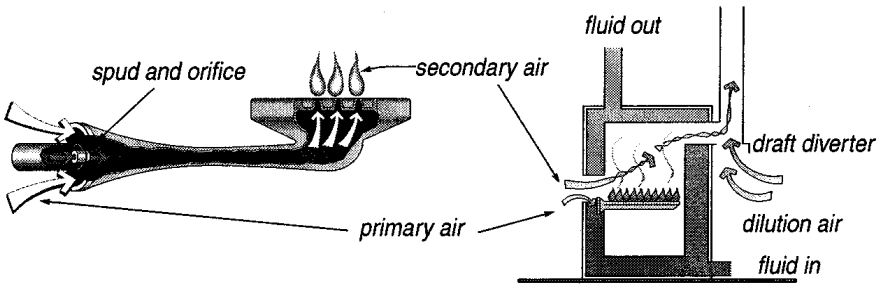

Atmospheric gas burners: *These burners use the heat of the flame to pull combustion air into the burner. Dilution air, entering at the draft diverter prevents too much excess air from traveling through the heat exchanger.*

Gas-burner inspection and testing

Perform the following inspection procedures and maintenance practices on all gas-fired furnaces, boilers, water heaters and space heaters. The goal of these measures is to reduce CO, stabilize flame, and test safety controls.

- Inspect the burners for dust, debris, misalignment, and other flame-interference problems. Clean, vacuum and adjust as needed.
- Look for soot, burned wires, and other evidence of flame roll-out.
- Inspect the heat exchanger for leaks. *See "Inspecting Furnace Heat Exchangers" in Section 2.6.1.*
- Assure that all 120-volt wiring connections are enclosed in covered electrical boxes.
- Clean and adjust thermostat and check thermostat heat anticipator setting. The thermostat's heat anticipator setting should match the measured current in the control circuit.
- Determine that pilot is burning (if equipped) and that main burner ignition is satisfactory.
- Sample the undiluted combustion gases with a calibrated analyzer.

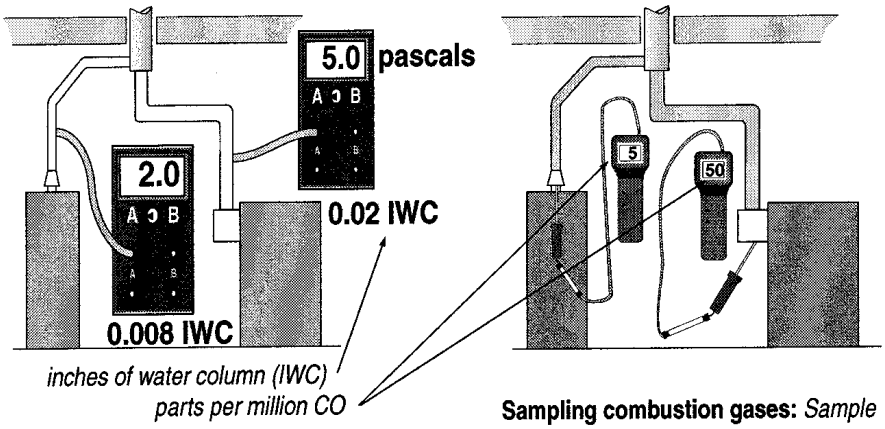

Measuring draft: *Measure chimney draft downstream of the draft diverter.*

Sampling combustion gases: *Sample combustion gases at the exhaust vent of the appliance before dilution air mixes with the gases.*

- Test pilot-safety control for complete gas valve shutoff when pilot is extinguished.
- Check venting system for proper size and pitch.
- Check venting system for obstructions or blockages.
- Measure chimney draft above the draft diverter.
- Test to ensure that the high limit control extinguishes the burner before furnace temperature reaches 200° F.
- Measure gas input, and observe flame characteristics if soot, CO, or other combustion problems are evident.

Proceed with burner maintenance and adjustment when:

- The appliance has not been serviced for two years or more.
- CO is greater than 50 ppm.
- Visual indicators of soot or flame roll-out exist.
- Burners are visibly dirty.
- Measured draft is low or nonexistent.

Gas-burner maintenance includes the following measures.

- Remove dirt, rust, and other debris that may be interfering with the burners.
- Remove causes of CO and soot, such as closed primary air intake, over-firing, and flame impingement.
- Take action to improve draft, if inadequate because of improper venting, leaky venting, obstructed chimney, etc.
- Seal leaks in vent connectors and chimneys.

- Adjust gas input.

Measuring BTU input on natural gas appliances

Use the following procedure when it's necessary to measure the input of a natural gas appliance.

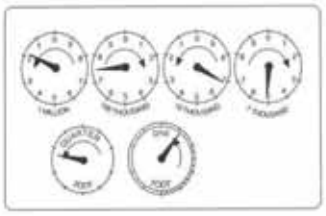

Gas meter dial: *By counting revolutions of one of the dials while timing with a watch, obtain the number of cubic feet per minute that the appliance is using. For example, if a water heater uses 1/4 foot in 30 seconds, it uses 1/2 foot per minute. Or, simply count the revolutions of the one-foot dial in 60 seconds.*

1. Turn off all gas combustion appliances such as hot water, dryers, cook stoves, and space heaters that are operating through the meter you are timing except for the appliance you are testing.
2. Allow the unit being tested to operate and locate the gas meter, which is usually outside the house.
3. Carefully count how many revolutions of the 1/2 or 1 cubic foot dial occur in one minute (or 30 seconds). Convert this number to cubic feet per minute. (For example, 112 cubic foot in 30 seconds or 1/4 cubic foot in 15 seconds both equal 1 cubic foot per minute.)
4. Refer to the formula below to get the gas input in BTU/hr.

$$\mathbf{I_h = F_g \ x \ Q_g \ x \ 60}$$

$\mathbf{I_h}$ is the heater's input in Btu/hr

$\mathbf{F_g}$ is the gas flow rate in cubic feet per minute

$\mathbf{Q_g}$ is the energy content of local gas, usually 850-1100 Btus/cu.ft.

2.4.2 Leak-Testing Gas Piping

Natural gas systems may have leaks at their joints and valves or at the appliance itself. An electronic combustible-gas detector, often called a gas sniffer, will find all significant gas leaks if used carefully. Therefore, RCAP service providers must perform the following:

a. Use the sniffer to check for natural gas leaks from all accessible gas supply lines and gas-fired appliances.

b. A faint odor/concentration of natural gas indicates a minor gas leak. This may mean a pilot is out on a gas appliance. Inform the occupants that you are reporting the leak to the Washington Gas emergency line at 703-750-1400, then do so. They will secure the equipment so that it is safe. Report the situation to DCEO as an emergency (202-673-6741 or 202-671-3308) and proceed with the audit. All leaks must be repaired before any weatherization work can commence.

c. If the odor/concentration of gas is stronger, immediately shut off the valve to isolate the gas leak. Inform the occupants that you are reporting the leak to the Washington Gas emergency line at 703-750-1400, then do so. They will secure the equipment so that it is safe. Do not return to the structure until the area has been declared safe and you have been authorized to return. Report the situation to DCEO as an emergency (202-673-6741 or 202-671-3308) and proceed with the audit. All leaks must be repaired before any weatherization work can commence.

d. If the odor/concentration of gas is very strong or a hissing noise can be heard, inform the occupants, let them know you will be reporting the leak to Washington Gas, and suggest that they leave the house immediately with you, being sure not to create a spark by turning on or off any light switches, flashlight or striking a match. As you leave, open doors and windows if you can do so quickly and easily. Call the Washington Gas emergency line at 703-750-1400 from a cell phone or a neighbor's house to report the leak, and tell them where you are so they can gain access to the house when they arrive. Alternatively, call the Fire Department (911). Do not return to the structure until the area has been declared safe and you have been authorized to return. Report the situation to DCEO as an emergency (202-673-6741 or 202-671-3308) and proceed with the audit. All leaks must be repaired before any weatherization work can commence.

2.4.3 Oil Burner Safety and Efficiency

Oil burners require annual maintenance to retain their operational safety and combustion efficiency. Testing for combustion efficiency (steady-state efficiency), draft, carbon monoxide, and smoke should be used to guide and evaluate the need and effectiveness of maintenance work. These procedures pertain to oil-fired furnaces, boilers and water heaters.

Oil burner inspection and testing

Use visual inspection and combustion testing to evaluate oil burner operation. An oil burner passing visual inspection and giving good test results may need no maintenance. If the test results are fair, adjustments may be necessary. Unsatisfactory test results may indicate the need to replace the burner or the entire heating unit.

Following these steps to achieve a minimum standard for oil-burner safety and efficiency:

- Inspect burner and appliance for signs of soot, over heating, fire hazards, or wiring problems.
- Verify that all oil-fired heaters are equipped with a barometric draft control, unless they have high-static burners or are mobile home furnaces.
- Assure that all 120-volt wiring connections are enclosed in covered electrical boxes.

- Inspect fuel lines and storage tanks for leaks.
- Inspect heat exchanger and combustion chamber for cracks, corrosion, or dirt.
- Check to see if flame ignition is instantaneous or delayed. Flame ignition should be instantaneous.
- Sample undiluted flue gases with a smoke tester, following the smoke-tester instructions. Compare the smoke smudge left by the gases on the filter paper with the manufacturer's smoke-spot scale to determine smoke number.
- Analyze the flue gas for 0_2 or $C0_2$ temperature, CO, and steady-state efficiency (SSE). Sample undiluted flue gases below the barometric draft control.

Table 2.4.3: Minimum Combustion Standards for Oil-Burning Appliances Without Flame-Retention Burners

Oil Combustion Performance Indicator	Standard
Carbon monoxide (CO) parts per million (ppm)	≤100 ppm
Steady-state efficiency (SSE) (%)	≥75%
Smoke number (1-9)	≤2
Excess air (%)	≤50%
Oil Pressure pounds per square inch (psi)	≥100 psi
Draft upstream of draft diverter (inches of water columns) (IWC)	0.02 IWC
Draft downstream of draft diverter (IWC)	0.04 IWC

- Measure chimney draft downstream from the barometric draft control and over-fire draft upstream from the barometric draft control.
- Measure high-limit shut-off temperature and adjust or replace the high-limit control if the shut-off temperature is more than 200° F.
- Measure oil-pump pressure and set to manufacturer's specifications.
- Measure transformer voltage and set to manufacturer's specifications.
- Assure that barometric draft controls are mounted plumb and level and that the damper swings freely.

- Time the CAD cell control or stack control to verify that the burner will shut off, within 90 seconds, when the CAD cell is blocked from seeing the flame.

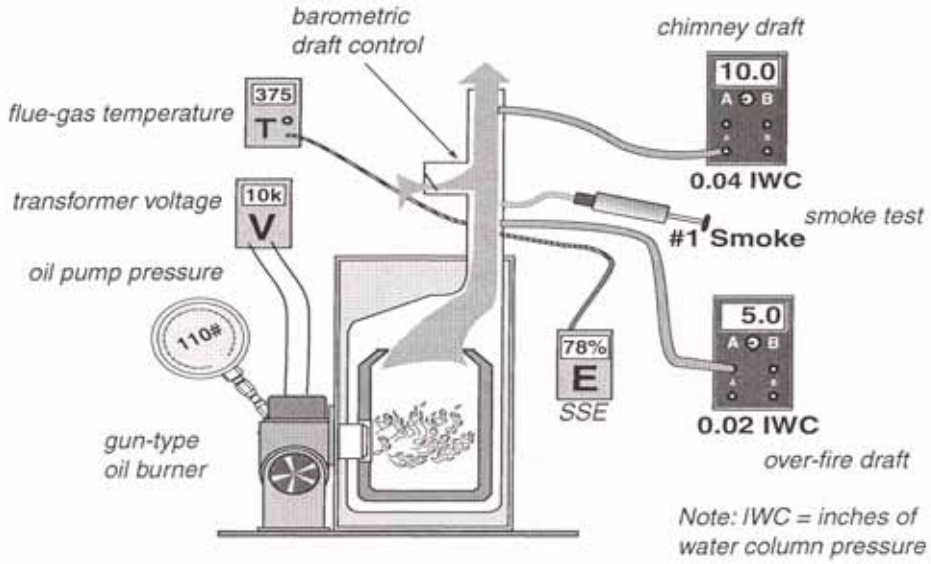

Measuring oil-burner performance: *To measure oil-burning performance indicators, a manometer, flue-gas analyzer, pressure gauge, and voltmeter are necessary.*

Oil burner maintenance and adjustment

After evaluating the oil burner's initial operation, perform some or all of the following maintenance tasks as needed to optimize safety and efficiency as part of weatherization service.

- Verify correct flame-sensor operation.
- Clean or replace burner nozzle.
- Clean the burner's blower wheel.

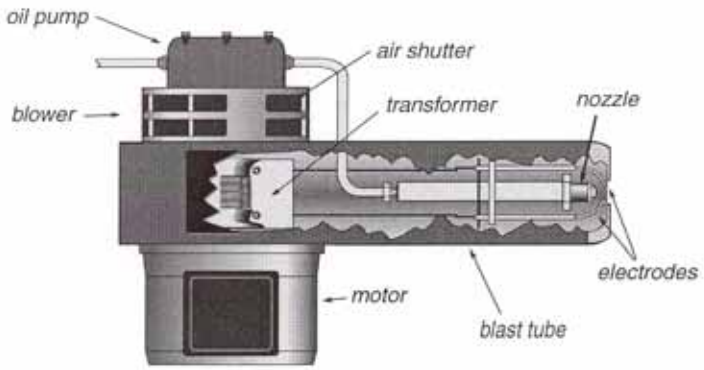

Oil burner: *Should have annual maintenance because its performance and efficiency will deteriorate over time if neglected.*

- Replace oil filter(s).
- Clean or replace air filter.
- Remove soot and sludge from combustion chamber.
- Remove soot from heat exchange surfaces.
- Clean the oil pump screen.
- Clean dust, dirt, and grease from the entire burner assembly.
- Set oil pump to correct pressure.
- Adjust air shutter for minimum smoke.
- Adjust barometric damper to about 0.02-to-0.04 inches W.C. draft downstream from the barometric draft control.
- Adjust gap between electrodes to manufacturer's specifications.
- Repair the ceramic combustion chamber, or replace it if necessary.
- Replace or adjust defective barometric damper.

After these maintenance procedures, the technician performs the diagnostic tests described above to evaluate improvement made by the maintenance procedures and to determine if fine-tuning is required.

Burner replacement with flame-retention burner

A flame-retention burner is a newer type of oil burner that gives a higher combustion efficiency by swirling the mist or oil and air to produce better mixing. Flame-retention burners waste less heat and have combustion efficiencies of 80% or slightly more.

Replacing an existing burner with a flame-retention model may be cost-effective if the existing SSE is less than 75%.

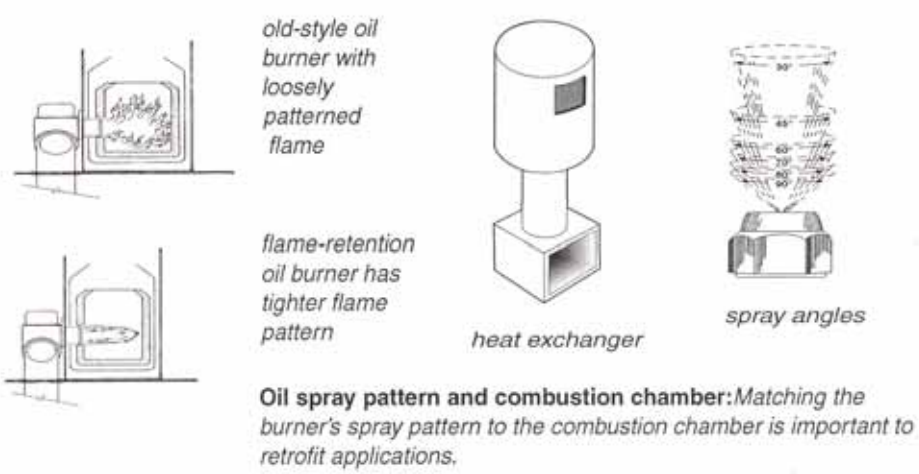

Oil spray pattern and combustion chamber: *Matching the burner's spray pattern to the combustion chamber is important to retrofit applications.*

If a furnace or boiler has a sound heat exchanger but the oil burner is inefficient or unserviceable, the burner may be replaced by a newer flame-retention burner. The new burner must be tested for efficient and safe operation as described previously.

- Size the burner and nozzle to match the building's heat load, making adjustments for new insulation and air sealing done during weatherization.
- Install new combustion chamber, choosing one that fits the size and shape of the burner flame. Or, change nozzles on the new burner to produce a flame that fits an existing combustion chamber that is still in good condition. Either way, the flame must fill the combustion chamber without impinging on it too much.
- Match nozzle's spray angle to the dimensions of the combustion chamber.

2.5 Heating System Replacement Specifications

Heating appliances are often replaced when the cost of repairs, retrofits or a combination of both exceed two thirds of estimated replacement costs. The replacement cost must, of course also be within the budget of the job as determined by an agency's policies and decision-making tools like NEAT or EA-QUIP. In some instances, it may be necessary for the heating contractor to repair a heating appliance before it can be tested. Estimate the repair and retrofit costs and compare them to replacement cost before proceeding.

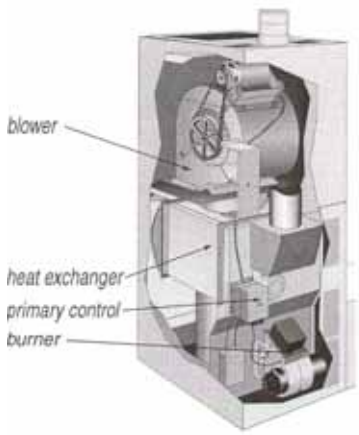

Oil-fired downflow furnaces: *Their design hasn't changed much in recent years except for the flame-retention burner.*

New heating appliances must be installed to manufacturer's specifications, following all applicable building and fire codes. Replacement gas furnaces should have a minimum Annual Fuel Utilization Efficiency (AFUE) of 90% and must be direct-vent, sealed-combustion units. Boilers and oil-fired units must have a minimum AFUE of 82%.

Heating appliances that are not operational and/or not repairable may be replaced. Heating appliance may also be replaced if the current system is a gravity furnace or boiler, converted from coal.

Sizing calculations must meet general HVAC sizing calculations such as Manual J or approved computerized load calculations. Sizing should account for lower heating loads resulting from insulation and air-sealing work.

Don't assume that older furnaces and boilers are inefficient until testing them. Before deciding to replace a heating system, every effort to repair and retrofit it should be made. Replacement parts like gas valves and controls for older heating units are commonly available. Repair is defined as any work needed to bring heating appliance up to manufacturer's specifications for safe and efficient operation. Repair items include replacing blower motors and pumps, fixing vent

connectors and chimneys, or other activities required to bring heating appliance up to safe and operable condition.

Specifications are presented here first according to fuel-type oil or gas-then by distribution type: forced air or hydronic.

2.5.1 Oil-Fired Heating Installation

The overall goal of the system replacement is to provide an oil-fired heating system in virtually new condition, even though components like the oil tank, chimney, piping, or ducts may remain. Any maintenance or repair on these remaining components should be considered part of the job. Any design flaws related to the remaining components should be uncovered and corrected during the heating-system replacement.

- Examine existing chimney and vent connector for suitability as venting for new appliance. The vent connector may need to be re-sized and the chimney may need to be re-lined.

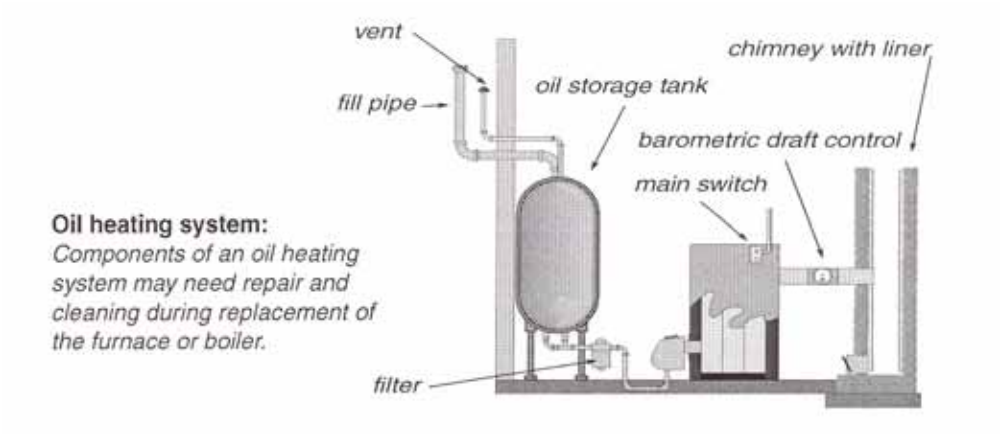

Oil heating system:
Components of an oil heating system may need repair and cleaning during replacement of the furnace or boiler.

- Check clearances of heating unit and its vent connector to nearby combustibles, by referring to NFPA 31. *See "Clearances to Combustibles for Common Vent Connectors" in Section 2.1.2.*
- Test oil pressure to verify compliance with manufacturer's specifications.
- Test transformer voltage to verify compliance with manufacturer's specifications.
- Adjust oxygen, flue-gas temperature, and smoke number to within manufacturer's specifications.
- Inspect oil tank and remove deposits at bottom of tank as part of new installation.
- Install new fuel filter and purge fuel lines as part of new installation.
- Bring tank and oil lines into compliance with NFPA 31, Chapters 2 and 3.

2.5.2 Gas-Fired Heating Installation

The overall goal of the system replacement is to provide a gas-fired heating system in virtually new condition, even though components, like the gas lines, chimney, water piping, or ducts may remain. Any necessary maintenance or repair on these remaining components should be considered part of the installation. Any design flaws in the distribution system, chimney, or other remaining component should be uncovered and corrected during the heating-system replacement.

The new furnace should have an Annual Fuel Utilization Efficiency of at least 80% and have a draft -assisting fan, electronic ignition, and no draft diverter. However, a sealed-combustion, condensing furnace with an AFUE of at least 90% is preferred.

- Check clearances of heating unit and its vent connector to nearby combustibles, according to NFPA 54.
- Clock gas meter to insure correct gas input. *See "Measuring BTU Input on Natural Gas Appliances" in Section 1.4.1.*
- Measure gas pressure to ensure that it is within manufacturer's specifications. Adjust gas pressure if necessary to obtain proper gas input.
- Test water heater to insure that it vents properly after installation of a sealed-combustion, horizontally vented furnace.
- Set thermostat's heat anticipator to the amperage measured in the control circuit or follow thermostat manufacturers instructions for adjusting cycle length.
- Follow manufacturer's venting instructions along with NFPA 54 to establish a proper venting system. *See "Guide to NFPA Standards" in Section 2.1.1 for more information about National Fire Protection Association (NFPA) Standards.*
- Ensure proper drip leg on gas line.

2.5.3 Furnace Installation

Installers should give purchasing preference to furnaces with electronically commutated blower motors or switched reluctance blower motors because these improved motors are significantly more efficient than standard split capacitor blower motors.

Observe the following standards in furnace installation:

- Furnace should be sized to the approximate heating load of the home

Sealed combustion heaters: *Sealed combustion furnaces and boilers prevent the air pollution and house depressurization caused by their open-combustion heating units.*

accounting for post-weatherization heat-loss reductions.

- Installer should add return ducts or supply ducts as part of furnace replacement to improve air distribution, to eliminate duct-induced house pressures, and to establish acceptable values for static pressure and heat rise.
- Supply and return plenums should be mechanically fastened with screws and sealed to air handler with mastic and fabrics mesh tape to form an essentially airtight connection on all sides of the joint.

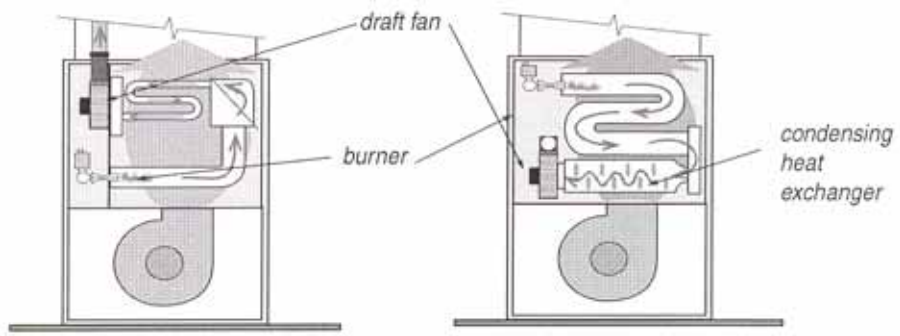

80+ gas furnace: *An 80+ furnace has a restrictive heat exchanger, a draft fan, and no draft diverter or standing pilot.*

90+ gas furnace: *A 90+ furnace has a condensing heat exchanger and a stronger draft fan for pulling combustion gases through its more restrictive heat*

- Heat rise (supply temperature minus return temperature) must be within manufacturer's specifications.
- High limit should stop fuel flow at less than 200°F. Furnace must not cycle on high limit.
- Fan control should be set to activate fan at 110°F and deactivate it at 90°F. Slightly higher settings are acceptable if these recommended settings cause a comfort complaint.
- Static pressure, measured in both supply and return plenums, should be within manufacturer's specifications.
- Blower must not be set to operate continuously.
- Holes through the air handler must be sealed by installer with mastic or foil tape.
- Filters should be held firmly in place and provide complete coverage of blower intake or return register. Filters must be easy to replace.

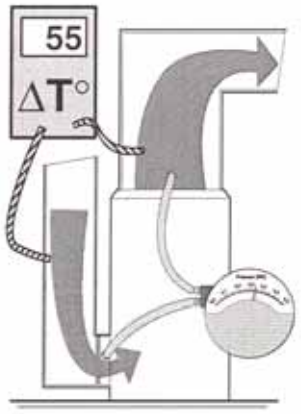

Static pressure and temperature rise: *Testing static pressure and temperature rise across the new furnace should verify that the duct system isn't restricted. The correct airflow, indicated by these tests, is necessary for high efficiency.*

- Air conditioning coils must be provided with airtight, removable panels, providing convenient access for cleaning.

2.5.4 Boiler Installation

Boiler controls are considerably more complex than furnace controls. Dividing the home into several zones each with its own thermostat can significantly improve energy efficiency.

The new boiler should have an AFUE of at least 80%. The new boiler should be equipped with electronic ignition and a draft-assisting fan. It should not have a draft diverter.

Boiler seasonal efficiency is more sensitive to proper sizing than is furnace efficiency. A boiler should not be oversized by more than 15%.

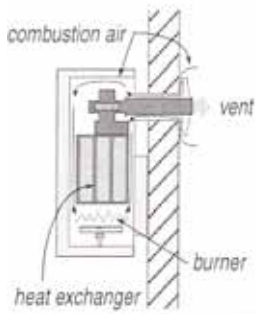

Wall-hung boiler: *Energy-efficient wall-hung boilers require less space of standard boilers.*

- Maintaining a low-limit boiler water temperature is very wasteful, unless the boiler is used for domestic water heating.
- An effective air-excluding device or devices must be part of the new hydronic system.
- The pressure tank must be replaced or tested for correct pressure during boiler installation.
- A pressure-relief valve must be installed with the new boiler.
- Install the pump near the downstream side of the pressure tank to prevent the suction side of the pump from depressurizing the piping, which can pull air into the piping.

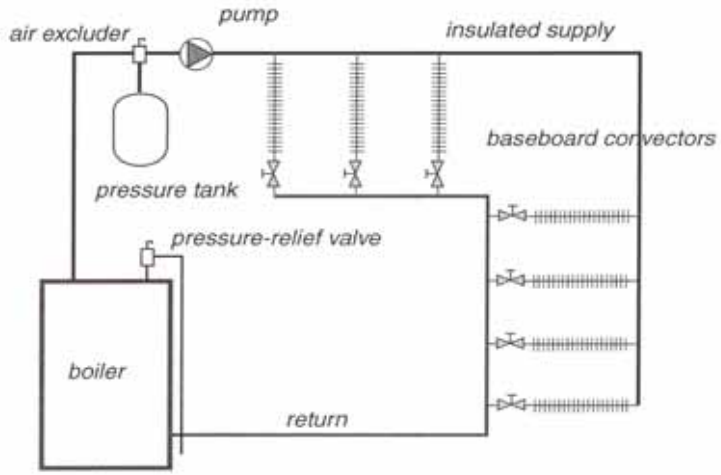

Simple reverse-return hydronic system: *The reverse-return method of piping is the simplest way of balancing flow among heat emitters.*

- Insulate all supply piping, outside conditioned spaces, with foam or fiberglass pipe insulation.
- Extend new piping and radiators to conditioned areas like additions and finished basements, currently heated by space heaters.

2.5.5 Electric Furnaces and Heat Pumps

Consider the following measures for electric furnaces:

- Check and clean thermostat.
- Check and oil blower motor, if applicable.
- Clean all filters; replace if necessary.
- Vacuum and clean housing around electric elements, if dirty.
- Clean a heat pump's indoor coil and outdoor coil if dirty.
- Clean fins on electric-baseboard systems, if applicable.
- Take extra care in duct sealing and duct airflow improvements for electric furnaces and heat pumps because of the high cost of electricity. *See "Duct Air-Tightness Standards" in Section 2.6.3 and "Improving Duct-System Airflow" in Section 2.6.5.*

2.6 Forced Air System Standards

The overall system efficiency of an oil or gas forced-air heating system is affected by blower operation, duct leakage, balance between supply and return air, and duct insulation levels. Retrofits to the forced-air system generally are more cost-effective than retrofits to the combustion side of the heat exchanger.

2.6.1 Inspecting Furnace Heat Exchanger

Ask clients about respiratory problems, flue-like symptoms, and smells in the house when the heat is on. Also, check around supply registers for signs of soot, especially with oil heating. All furnace heat exchangers should be inspected as part of weatherization. *For information on combustion testing, see "Combustion Safety and Efficiency Testing" in Section 2.4.* Consider using the following seven general options for evaluating heat exchangers.

1. Look for flame-damaged areas near the burner flame.
2. Look for rust at exhaust ports and vent connector.
3. Measure the oxygen or carbon dioxide concentration in the flue gas before the blower starts and just after it has started. There should be no more than a 1% change in the oxygen concentration or no more than a 0.5% change in

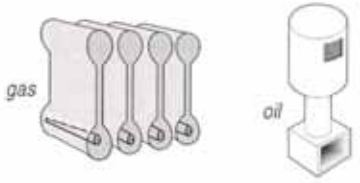

Furnace heat exchangers: *Although no heat exchanger is completely airtight, it should not leak enough to display the warning signs described here.*

carbon dioxide.

4. Look for flame impingement on the heat exchanger during firing.
5. Observe flame reaction or change in chimney draft to blower being turned on and off.
6. Examine the heat exchanger, shining a bright light on one side and looking for light traces on the other using a mirror to peer into tight locations.
7. Employ chemical detection techniques, following manufacturer's instructions.

If you find a cracked heat exchanger, replace the heat exchanger. Replace furnace if total repair costs exceed two thirds of furnace replacement cost.

2.6.2 Furnace Operating Standards

Apply the following furnace-operation standards to maximize the heating system's seasonal efficiency and safety.

Check temperature rise after 5 minutes of operation. Refer to manufacturer's nameplate for acceptable heat rise (supply temperature minus return temperature). The heat rise should be between 40°F and 90°F with the lower end of this scale being preferable for maximum efficiency.

- All forced air heating systems must deliver both supply and return air to the intentionally heated portion of the house. It is not allowable to take return air from an unintentionally heated area of the house such as a basement.

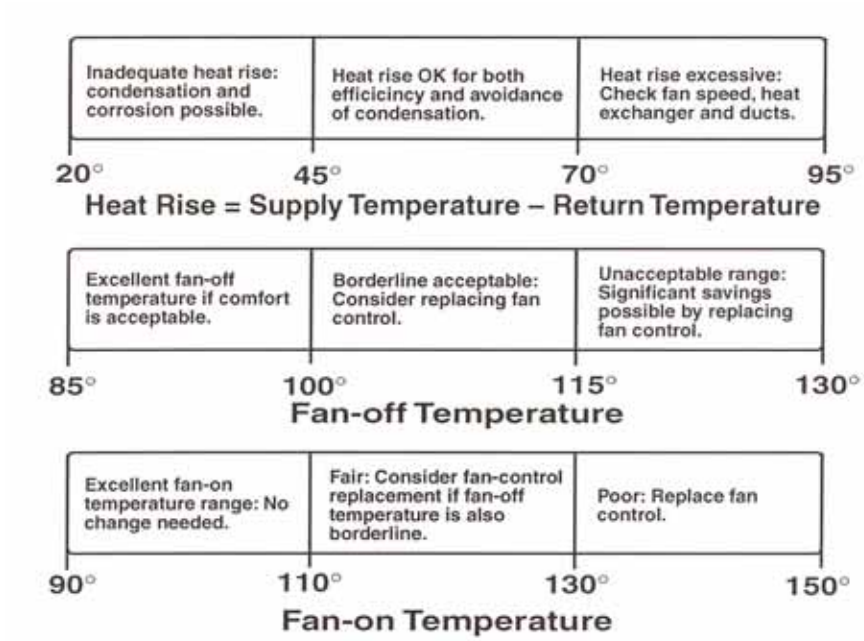

Table 2.6.2: Furnace Operating Parameters

- The fan-off temperature should be between 90°F and 100°F, with the lower end of the scale being preferable for maximum efficiency.
- The fan-on temperature should be less than 120°F.
- The high-limit controller should shut the burner off before the furnace temperature reaches 250°F.
- On time-activated fan controls verify that the fan is switched on within two minutes of bummer ignition and is switched off within 2.5 minutes of the end of the combustion cycle.

If the heating system does not conform to these standards, consider the following improvements.

- Reduce heat rise by cleaning or changing dirty filters, cleaning the blower, increasing fan speed, and improving ducted air circulation. *See "Improving Duct-System Airflow" in Section 2.6.5.*
- Adjust fan control to conform to the above standards or replace the fan control if adjustment fails.

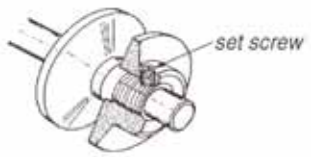

Adjustable drive pulley: *Moves back and forth allowing the belt to ride higher or lower, adjusting the blower's speed.*

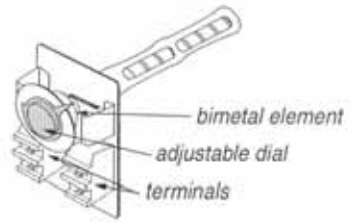

A fan/limit control: *Turns the furnace blower on and off, according to temperature and also turns the burner off if the heat exchanger gets too hot.*

- Adjust the high-limit control to conform to the above standards or replace the high-limit control.

2.6.3 Duct Air-Tightness Standards

Duct air leakage is a major energy-waster in homes where the ducts are located outside the home's thermal boundary in a ventilated crawl space or attic or in a leaky basement. When the weatherization job will leave these areas outside the thermal boundary, duct air-sealing is cost-effective.

Ducts should be tested to determine how much they leak before any duct air sealing is performed. *For information on duct testing, see "Duct Airtightness Testing" in Section 3.4.*

Duct leakage sites

The following joints should be inspected and sealed if testing points to significant duct leakage. Ducts located outside the thermal boundary or in an intermediate zone like a ventilated attic or crawl space should be sealed. The following is a list of duct-leak locations in order of their relative importance. Leaks nearer to the air handler see higher pressure and are more important than leaks further away.

- Plenum joint at air handler: These joints may have been difficult to fasten and seal because of tight access. Go the extra mile to seal them airtight with mastic and fabric mesh tape.
- Joints at branch takeoffs: These important joints should be sealed with a thick layer of mastic. Fabric mesh tape is a plus for new installations or when access is easy.
- Joints in sectioned elbows: Known as gores, these are always leaky.
- Tabbed sleeves: Attach the sleeve to the main duct with 4 to 6 screws and apply mastic plentifully.
- Flexduct-to-metal joints: Clamp the flex duct's inner liner with the strap tensioner. Run a screw or two next to the strap when the flex duct is pulling slightly on the metal collar to keep it from separating. Clamp the insulation and outer liner with another strap.
- Support ducts and duct joints with duct hangers where needed.
- Seal leaky joints between building materials composing cavity return ducts, like panned floor cavities and furnace return platforms. Even better: replace cavity return ducts with new metal return ducts.
- Seal leaky joints between supply and return registers and the floor, wall, and ceiling to which they are attached.
- Plug open supply and return registers in unconditioned areas.
- Seal penetrations made by wires or pipes traveling through ducts. Even better: move the pipes and wires and patch the holes.

Duct mastic: *Mastic, reinforced with fabric webbing, is the best choice for sealing ducts.*

Materials for duct air-sealing

Duct mastic is the preferred duct sealing material because of its superior durability and adhesion. Apply at least 1/16-inch thick and use reinforcing mesh for all joints wider than 1/16-inch or joints that may experience some movement.

Tape should never be expected to hold a joint together nor expected to resist the force of compacted insulation or joint movement. Joints should rely on mechanical fasteners to prevent joint movement or separation.

Butyl-aluminum tape is the only acceptable tape product allowed for duct sealing. However, it is considerably more expensive than mastic applications and is only effective and durable when applied to clean surfaces. Do not use this type of tape on or near the supply plenum as it may exceed the temperature rating of the tape.

Aluminum foil or cloth duct tape are not good materials for duct sealing because their thin adhesive often fails after a short time.

2.6.4 Duct Insulation

Insulate supply ducts that run through unconditioned areas out side the thermal boundary such as crawl spaces and attics with a minimum of R-6 vinyl- or foil-faced duct insulation. Don't insulate ducts that run through conditioned areas unless they cause overheating in winter or condensation in summer. Follow the best practices listed below for installing insulation.

- Always perform necessary duct sealing before insulating ducts.
- Insulation should cover all exposed supply ducts, without significant areas of bare duct left uninsulated. This is especially important in air-conditioned homes because the insulation must prevent condensation. Even a small void in the insulation can dampen a large section of insulation through condensation.
- Insulation should be fastened by mechanical means such as stuck ups, twine, or plastic straps. Tape can be effective for covering joints in the insulation to prevent air convection, but tape will usually fail if expected to resist the force of the insulation's compression or weight.

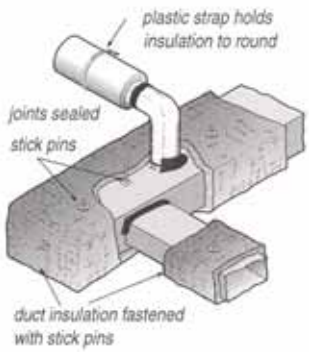

Duct insulation: *Supply ducts exposed to extreme summer and winter temperatures should be insulated to a minimum of R-10.*

2.6.5 Improving Duct-System Airflow

If occupants complain of lack of heat (or cooling), there may be inadequate airflow. The airflow capacity of the air handler may be checked in relationship to the size of the furnace or air conditioner. For combustion furnaces there should be 110-to-150 cfm of airflow for each 10,000 Btuh of output. Central air conditioners and heat pumps should deliver 400 cfm of airflow per ton of cooling or heating capacity. *See "Furnace Installation" in Section 2.5.3 for more information about airflow indicators.*

When the air handler is on there should be a strong flow of air out of each supply register, providing its balancing damper is open. Low airflow may mean that a branch is blocked or separated, or that return air is not sufficient. When low airflow is a problem, consider the following improvements.

- Clean or change filter.
- Clean furnace blower.
- Clean air-conditioning or heat pump coil.

- Increase furnace fan speed.
- Lubricate blower motor and check tension on drive belt.
- Add another return-air duct.
- Repair or replace bent, damaged, or restricted registers.

Filter and blower maintenance

A dirty filter can reduce airflow significantly. Special air-cleaning filters offer more resistance than standard filters, especially when saturated with dust. Take action to prevent filter-caused airflow restriction by the following steps:

- Install a filter whistle that indicates when the filter is dirty.
- Insure that filters are easy to change or clean.

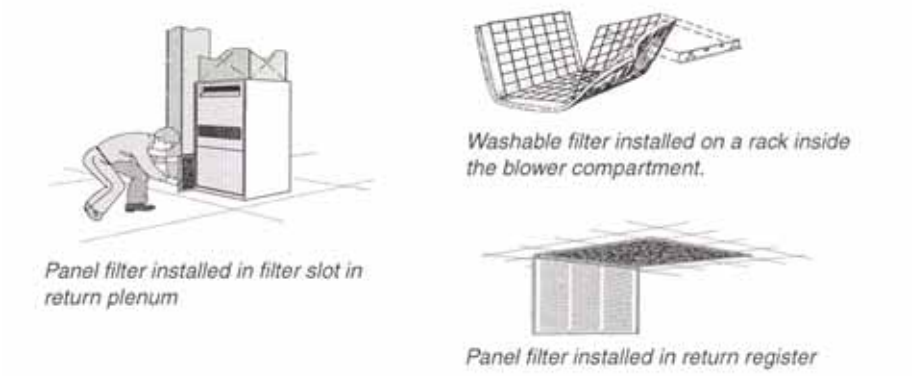

Furnace filter location: *Filters are installed on the return-air side of forced air systems. Look for them in one or more of the following places.*

- Stress to the client the importance of changing or cleaning filters, and suggest to the client a regular filter-maintenance schedule.
- Clean the blower. This task involves removing the blower and removing dirt completely with a brush or water spray.
- Measure the current draw of the blower motor in amps. If the amp measurement exceeds the motor amp rating by more than 10%, replace the motor.

Cleaning air-conditioning coils

Dirty air-conditioning coils located in main ducts or air handlers are a common cause of low airflow and resultant low heating and cooling efficiency. Dirty heat pump coils are a major cause of poor heat-pump performance. Follow the general guidelines listed here when cleaning air-conditioning and heat-pump coils.

- Identify the coil location and the coil surface where the air enters most of the dirt will be attached to this surface.
- Remove access panel in air handler or duct, cut access panel in duct, or disassemble duct to gain access to the coil.

- Using a stiff hairbrush, remove surface dust, dirt, and lint.

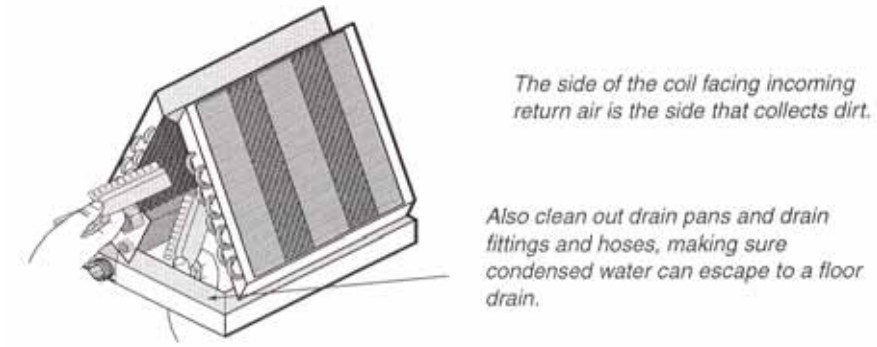

Cleaning indoor coils: *Gaining access to the coil is often the biggest challenge to cleaning it. Sometimes the coil will slide out of the duct or air handler housing it. Other times, the coil or the air handler must be disconnected and moved to gain access.*

- Spray the coil with cleanser, and after a while, spray water to rinse out the cleanser and dirt. Repeat the spraying if necessary.
- Observe whether the pan and drain hose that drain the coil are doing their job. Water and cleanser should be flowing into the pan and through the hose into a drain. Water should not be overflowing into the duct. Cleaning the pan and unplugging the hose is often necessary.

Duct improvements to increase airflow and improve comfort

Consider the following improvements in response to customer complaints and conditions you observe during a thorough duct inspection. Unbalanced airflow through ducts can pressurize or depressurize rooms, leading to increased air leakage through the building shell. *For information on how to test these room pressures, see "Measuring Duct-Induced Room Pressures" in Section 3.5.1*.

- Remove obstructions to registers and ducts such as rugs, furniture, and objects placed in ducts, like children's toys and water pans for humidification.
- Remove kinks from flex duct, and replace collapsed flex duct and fiber duct board.
- Install additional supply ducts as needed to provide heated air throughout the building, especially into additions to the building.
- Install additional return ducts as needed to provide heated air throughout the building, especially into additions to the building.
- Retrofit crossover ducts, composed of one register in the bedroom, one register in the central return-air zone, and a duct in between (usually running through an attic or crawl space).
- Install registers and grilles where missing.

- Install a transfer grille between the bedroom and main body of house may also be done to help improve airflow.
- Undercutting bedroom doors, especially in homes with central return systems.

New ducts

New ducts should not be installed in unconditioned spaces unless absolutely necessary. If ducts are located in unconditioned spaces, joints shall be sealed and the ducts insulated as described previously. *See "Duct Air-Tightness Standards" in Section 2.6.3 and "Duct Insulation" in Section 2.6.4.*

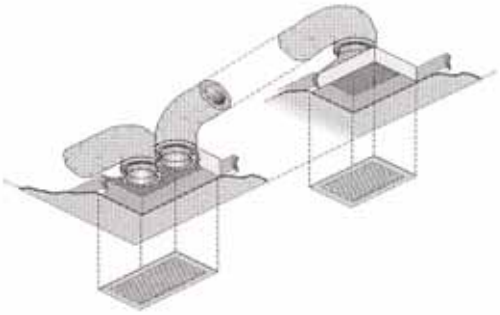

Jumper ducts can bring air from a restricted area of the home back to a main return register.

Installing grills in doors or through walls allows return air to escape from bedrooms

Restricted return air: *Return air is often restricted, requiring a variety of strategies to relieve the resulting house pressures and low airflow. Installing an additional return duct directly into the air handler may sometimes be necessary.*

New ducts must be physically connected to the existing distribution system or to the furnace. Operable registers should terminate each new supply or return branch duct.

2.7 Hydronic Standards

The following standards refer to hydronic systems commonly found in single-family homes. Hydronic systems found in multi-family buildings are generally more complex and should be tested and evaluated by professionals experienced in their operation. Observe the following standards for servicing hydronic heating systems in single family structures.

2.7.1 Hot Water Space-Heating

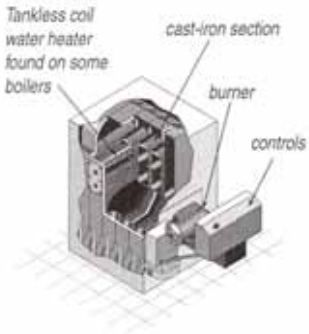

Cast-iron sectional boilers: *Are the most common boilers for residential applications.*

Hot water heating is generally a little more efficient than forced-air heating and considerably more efficient than steam heating. The most significant energy wasters are off-cycle flue losses stealing heat from stored water and operating at too high a water temperature. Boilers are more dangerous than furnaces, so checking their limit controls and pressure tank are important safety procedures. Consider the following safety checks and improvements:

- Check operation of a 30-psi-rated pressure-relief valve and replace or add one if necessary. Note signs of leakage or discharges and find out why the relief valve is discharging.
- Check for leaks on the boiler, its fittings or on any of the distribution piping connected to the boiler. High-limit control should deactivate boiler at 200° F or less.
- Make sure that the pressure tank isn't waterlogged This could cause pressure-relief valve discharge. Test pressure tank for its rated air pressure – often 15 psi.
- Lubricate circulator pump if necessary.

Consider the following efficiency improvements:

- Repair water leaks in the system.
- Boiler should not have low-limit control for maintaining a minimum boiler-water temperature, unless the boiler is heating domestic water in addition to space heating.
- Bleed air from radiators and piping through air vents in elbows or radiators. Most systems have an automatic fill valve. If there is a manual fill valve for refilling system with water, it should be open to push water in and air out, during air purging.

Purging air: *Trapped air collects at the hydronic system's highest parts. Bleeding air from radiators fills the radiator and gives it more heating surface area.*

- Consider installing electric vent dampers on atmospheric gas- and oil-fired high-mass boilers.
- Consider installing reset controllers on larger boilers to regulate water temperature, depending on outdoor temperature.
- Clean fire side of heat exchanger of noticeable dirt.
- Vacuum and clean fins of fin-tube convectors if you notice dust and dirt there.
- Verify that all hot water boilers have a pressure tank to control pressure and prevent system damage from water's expansion.
- Insulate all supply piping, passing through unheated areas, with foam pipe insulation, at least one-inch thick, rated for temperatures up to 200° F.

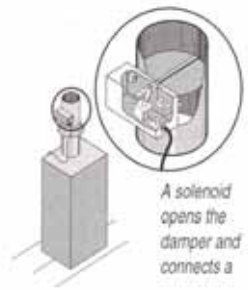

Vent dampers: *Electric vent dampers close the chimney when the burner isn't firing, preventing circulating air from carrying the boiler's stored heat up the chimney.*

2.7.2 Steam Heating

Steam heating is less efficient than hot water heating because a steam boiler heats water to its boiling point before making any steam or doing any space heating. Higher temperature heating systems are less efficient than lower temperature ones. Steam boilers are also more hazardous because of the steam pressure. For these reasons heating-system replacement with a hot-water or forced-air system should be considered.

If the steam-heating system must remain, operate it at the lowest steam pressure that will heat the building. This may be near 0 psi on the boiler pressure gauge. Large buildings need higher steam pressures but smaller ones can operate at little or no measurable steam pressure. Traps and air vents are crucial to operating at a low steam pressure. Electric vent dampers will reduce off-cycle losses for both gas- and oil-fired systems.

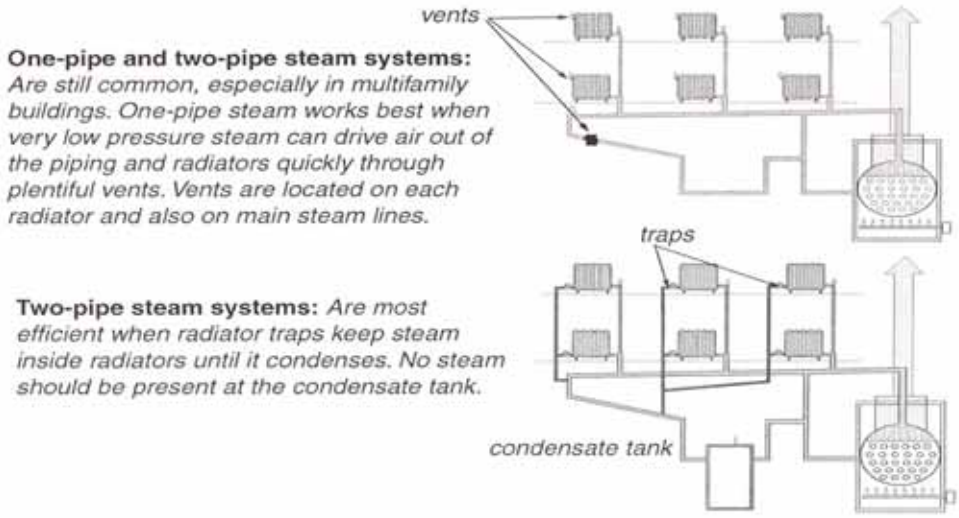

Perform the following for safety checks steam systems:

- Steam boilers should be equipped with high-pressure limits and low water cut off controls. Verify that high-pressure limit control is set at or below 10 psi.
- Verify that flush valves on low-water cutoffs are operable and do not leak.
- On steam boilers with externally mounted low-water cut offs, verify the function of the control by flushing the low-water cutoff with the burner operating. Combustion must cease when the water level in the boiler drops below the level of the float.

Consider the following efficiency checks and improvements for steam systems:

- Verify steam vents are operable and that all steam radiators receive steam during every cycle. Unplug vents as necessary. Add vents to

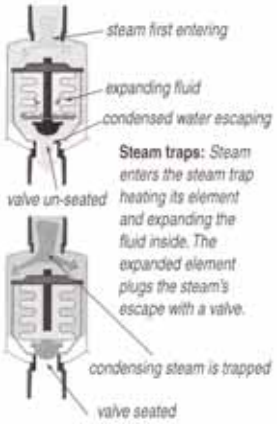

steam lines and radiators as needed to achieve this goal.

- Check steam traps with a digital thermometer or listening device to detect any steam escaping from radiators through the condensate return. Replace leaking steam traps or their thermostatic elements. Repair leaks on the steam supply piping or on condensate return piping. escape with a valve.
- Consider a flame retention burner and electric vent damper as retrofits for steam boilers.
- Clean fire side of heat exchanger of noticeable dirt.
- Drain water out of blow-down valve until water runs clear.
- Check with owner about chemicals added to boiler water to prevent corrosion. Add chemicals if necessary.
- All steam piping, passing through unconditioned areas, should be insulated to at least R-3 with insulation rated for steam piping.

2.8 Water Heaters

Gas-, propane-, and oil-fired water heaters must be tested, maintained, and repaired as described in the sections on burners and venting. *See "Measuring Draft and House Pressures" in Section 1.3 and "Combustion Safety and Efficiency Testing" in Section 2.4.*

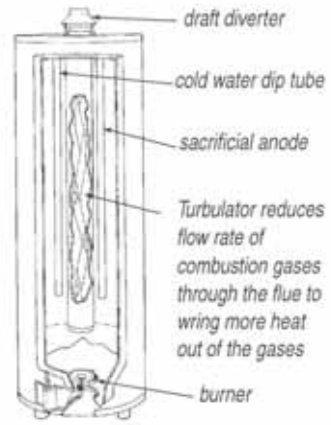

Standard gas water heater: *Is an open combustion appliance often troubled by spillage and backdrafting.*

- All water heaters must have a pressure-and-temperature relief valve and a safety discharge pipe. Install a relief valve and discharge pipe if none exists. The pipe must terminate 6 inches above the floor and be made of rigid metallic material or high temperature plastic.
- Water heaters should be re-insulated to at least R-10 unless water heater label gives specific instructions not to insulate or water heater is already insulated.
- Water heater insulation must not obstruct draft diverter, pressure relief valve, thermostats, hi limit switch, plumbing pipes, or access plates.
- Adjust water temperature to a maximum of 120°F with clients' approval, unless the client has a older automatic dishwasher without its own water-heating booster. In this case the maximum setting is 140°F.

2.8.1 Gas-Fired Water-Heater Insulation

- Keep insulation at least 2 inches away from the access door to the burner.
- Insulation should not extend below the top of the water heater's gas valve.
- Do not insulate the tops of gas fired water heaters.

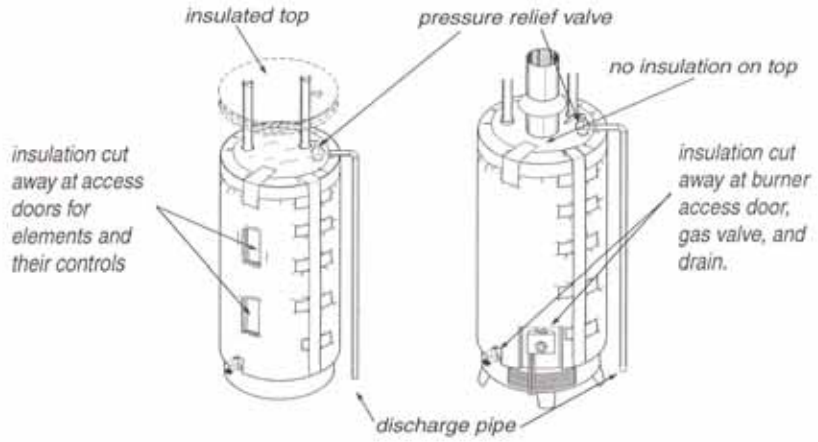

Water heater insulation: *Insulation should be installed carefully so it doesn't interfere with the burner, elements, draft diverter, or pressure relief valve.*

2.8.1A Electric Water-Heater Insulation

- Set both upper and lower thermostat to keep water at 120°F before insulating water heater.
- Insulation may cover the water heater's top if the insulation will not obstruct the pressure relief valve.
- Access holes should be cut in the insulation for the heating element thermostats, or better, thermostat location should be marked with a permanent marker to preserve the insulation's integrity until the access is needed.

2.8.2 Pipe Insulation

- Insulate the first 6 feet of both hot- and cold-water pipes.
- Cover elbows, unions and other fittings to same thickness as pipe.
- Keep pipe insulation at least 3 inches away from flue pipe.
- Interior diameter of pipe sleeve must match exterior diameter of pipe.

2.8.3 Electric Water Heater Efficiency

A replacement electric water heater must have an energy factor of at least 0.88.

2.8.4 Gas Water Heater Efficiency

In tight homes or homes where the mechanical room is located in living areas, replacement gas or oil water heaters must be either power-draft or sealed-combustion. Sealed-combustion water heaters are preferred in tight homes with a water heater installed in the living space. A replacement gas or oil water heater must have an energy factor of at least 0.58.

3.0 ASSESSING AIR LEAKAGE THROUGH THE BUILDING SHELL AND THROUGH DUCTS

The home is a system with many functions. Changing one part of the system may affect other parts. Air leaks can bring pollutants in or let pollutants, generated indoors, out. Air leakage through the building shell and the operation of the home's air handler and ducts are interrelated. The air handler's blower, ducts, exhaust fans, chimneys create house pressures that drive air through leaks in the building shell.

Air-sealing or duct sealing may affect combustion appliance venting by increasing house pressures or reducing the available supply of combustion air. Negative house pressures (or slight vacuum) in the combustion zone can cause atmospherically vented open-combustion appliances to backdraft, continuously spilling their combustion products.

Weatherization technicians test and evaluate the house pressures, air leakage, duct leakage and heating-system performance before deciding exactly what kinds of energy-efficiency measures are most appropriate for a home. Evaluating the test data helps technicians anticipate backdrafting and other unintended problems relating to cost-effective shell air sealing and duct sealing.

The test methods presented here include a variety of tests used by successful weatherization programs. These tests would almost never all be performed on a single home. Deciding which tests to conduct is a matter of experience. The goal of air-leakage and pressure testing is to measure leakage rates and decide how much time and effort is required to achieve acceptable air-leakage and duct-leakage rates, while safeguarding indoor air quality.

Therefore, the following tests must be performed for the dwelling unit:

- House air tightness test
- Blower door test
- Pressure testing air barriers
- Duct air tightness testing
- Duct induced room pressures

3.1 House Airtightness Testing

House airtightness testing was made possible by the development of the blower door, shown here. The blower door measures a home's leakage rate at the standard pressure of 50 pascals. This leakage measurement can be used to compare homes with one another and set air-leakage standards.

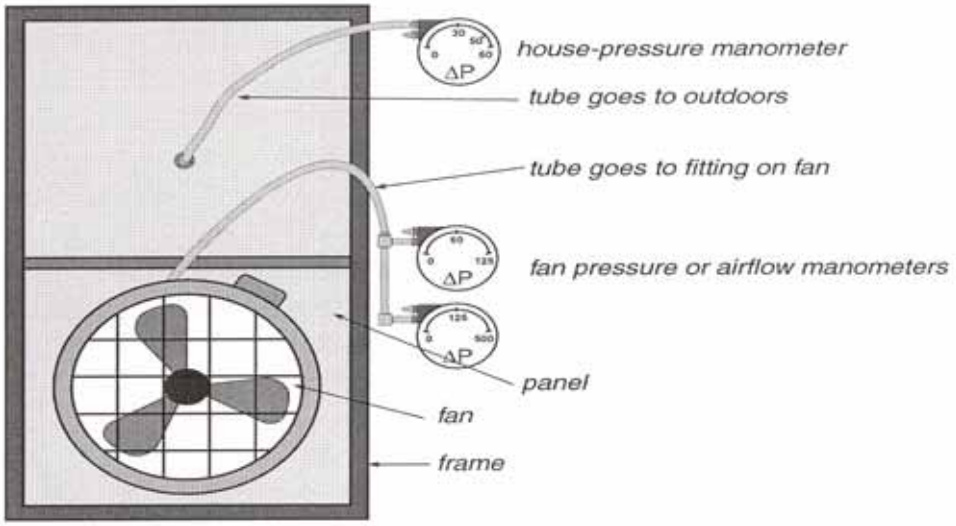

Blower door components: *Include the frame, panel, fan, and manometers. The gauge faces of the two analog airflow manometers are shown herewith their different scales for the different operating conditions of the blower door with and without its rings installed.*

The blower door also allows the technician to test parts of the home's air barrier to locate air leaks. Testing air barriers with a blower door isn't always necessary. Sometimes air leaks are obvious. Other times the leaks are hidden, and the technician wants to obtain clues about their location without crawling needlessly into dark and dirty places. This section outlines the basics of blower door testing along with some techniques for gathering clues about the location of air leaks.

3.1.1 When Not to Air Seal

Perform no air sealing when there is obvious threat to the occupants health, the installers health, the building's durability, or to the effectiveness of the air-sealing materials. *See "Health and Safety Information" in Section 1.14 for more information*. The following circumstances must be corrected before or during air-sealing work or air-sealing shouldn't be performed.

1. The building is scheduled for demolition or major rehabilitation and the materials would likely be removed.
2. Moisture has caused structural damage, dry rot, mold or mildew growth.
3. Fire hazards place the building's life in jeopardy.
4. Carbon monoxide levels exceed suggested action levels.
5. Combustion appliance zones exceed -5 pascals when the air handler is running.
6. Chimney drafts of combustion appliances do not meet minimum standards.
7. Unvented space heater will be used after air-sealing work.
8. Infestations, vermin, or sanitary issues are present.

9. The building is already at or below the Building Tightness Limit and no mechanical ventilation exists or is planned.

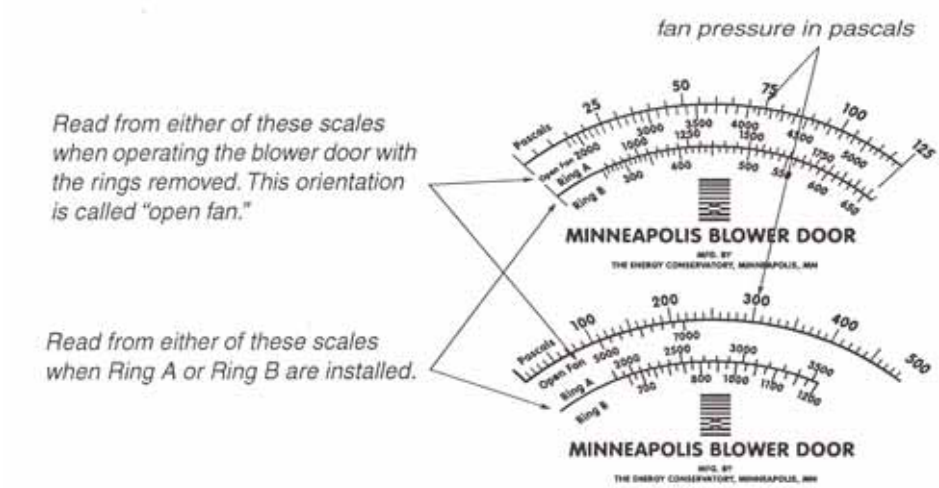

Blower door analog gauges: *Blower door airflow gauges provide ranges for accurate measurement of homes with a wide variety of airtightness.*

3.2 Blower Door Testing

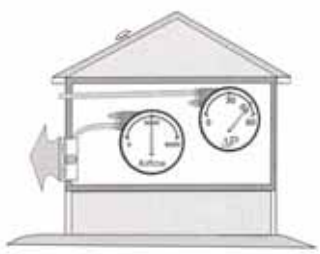

Standard blower door test: *The house is depressurized to –50 pascals and the airflow through the fan is measured.*

The blower door measures air-flow at 50 pascals house pressure, producing a number (CFM_{50}) that is used to compare the leakiness of homes. The blower door also creates pressure differences between rooms in the house and intermediate zones like attics and crawl spaces that can give clues about the location and size home's air leaks. Pressures caused by the home's exhaust fans are important too because they can cause chimney problems, moisture problems, and excessive air leakage through the shell.

Measuring house pressure differences

Digital manometers: *Are popular for diagnosing zone pressures and duct pressures because of their convenience and accuracy.*

Connecting the manometer's hoses correctly is essential for pressure testing. A widely accepted method for recording correct hose connection helps avoid confusion. This method uses the phrase "with reference to", abbreviated "WRT" to denote the input and reference zones for a particular measurement. The outdoors is the most commonly used reference zone for pressure diagnostics and is considered to be 0 pascals. For example, house WRT outdoors = -50 pascals means that the house (input) is 50, pascals negative compared to the outdoors (reference or zero-point). The pressure reading in the last example is

called the house-to-outdoors pressure difference.

There are two common ways to measure intermediate-zone pressures during blower door testing. The first is measuring house WRT zone, also called the house-to-zone pressure. The second is measuring zone WRT outdoors also called the zone-to-outdoors pressure. These two pressures should add up to -50 pascals, which is the house-to-outdoors pressure during a standard -50-pascal blower-door depressurization test. Therefore, the house-to-zone pressure plus the zone-to-outdoors pressure equals the house-to-outdoors pressure.

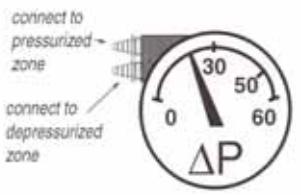

Analog manometers: *These less expensive manometers measure only pressure magnitude. You must know which zone is pressurized and which is depressurized.*

Because these intermediate-zone pressures add up to -50 pascals, subtracting either of these zone pressures from -50 pascals gives you the other one. For this reason, many technicians measure only one pressure, feeling confident that they know the other. Some technicians consider zone-to-outdoors more reliable because the outdoors is the reference zone for the blower-door test. Other technicians prefer house WRT zone because you only need one hose connected to the manometer. It's often wise to measure both pressures, especially in complicated homes with multiple air-leakage problems.

3.2.1 Preparing for a Blower Door Test

Preparing the house for a blower door test involves putting the house in its heating or cooling operating condition with all conditioned zones open to the blower door. Anticipate safety problems that the blower door could cause, particularly with combustion appliances. Understand how you will use the measurements you take during the blower door test.

- Identify location of the thermal boundary and which house zones are conditioned.
- Identify and repair large air leaks that could prevent the blower door from achieving adequate house pressure.
- Survey pollutants that may be pollute the air during a blower door test-wood-stove or fireplace ashes for example.
- Measure house volume if you plan to use ACH_{50} (air changes per hour at 50 pascals) or ACH_n (air changes per hour-natural).
- Put the house in its heating and/or cooling mode with windows, doors, and vents closed and air registers open.
- Turn off combustion appliances temporarily.
- Open interior doors so that all indoor areas inside the thermal boundary are connected to the blower door.
- Assure children and pets are at a safe distance from fan blades.

3.2.2 Blower Door Test Procedures

Blower door tests are used by technicians charting their progress in air sealing homes. They are also used by inspectors and auditors to assess a building's leakiness.

1. Install blower door frame, panel, and fan in an exterior doorway.
2. Follow manufacturer's instructions for fan orientation and manometer setup for either pressurization or depressurization.
3. Connect the house-pressure manometer to measure house WRT outdoors.
4. Connect the airflow manometer to measure fan WRT zone near fan inlet. The zone near the fan inlet is indoors for depressurization and outdoors for pressurization.
5. Make pretest adjustments to manometers following manufacturer's instructions.
6. Turn on the fan and adjust its speed to produce 50 pascals of pressure difference between indoors and outdoors.
7. Read the CFM_{50} from the airflow manometer or from the second channel of a two-channel digital manometer.
8. If the house cannot be depressurized to –50 Pa, depressurize to highest multiple of 5 and multiply your measured airflow by the "can't reach 50" (CRF) factors in the conversion table shown here.

Table 3.2.2: "Can't Reach Fifty" Factor

House Pressure	15	20	25	30	35	40	45
Can't Reach 50 Factor	2.2	1.8	1.6	1.4	1.3	1.2	1.1

Thanks to The Energy Conservatory

Post-blower-door-test essentials

Be sure to return all temporary measures, taken to facilitate the blower door test, to their original condition.

- Inspect all pilot lights of combustion appliances to assure that blower door testing did not extinguish them.
- Reset thermostats of heaters and water heaters that were turned down for testing.

Approximate leakage area

There are several ways to convert blower door CFM_{50} measurements into square inches of total leakage area. The simplest way to convert CFM_{50} into an approximate leakage area (ALA) is to divide CFM_{50} by 10. The ALA can help

you visualize the size of openings you're looking for in a home or section of a home.

$$\mathbf{ALA = CFM_{50} + 10}$$

3.2.3 Building Tightness Limits (BTL)

Air leakage must provide ventilation when no mechanical ventilation system exists because the air leaks are the home's only source of fresh air to remove pollutants. Follow these steps to determine the building tightness limit (BTL).

1. Obtain the number of occupants by each of the following ways, and then use the largest number: a) actual number of occupants, b) number of bedrooms plus one, or c) minimum of 5 occupants per living unit
2. Locate your climate zone from the map shown here.
3. Decide whether the building is well-shielded from wind, directly exposed to wind, or "normal," which means somewhere in-between exposed and well-shielded.
4. Find the factor "n" where the column representing the building's number of stories meets the row representing your location and the building's shielding. (This factor converts 50-pascal airflow to natural airflow and vice versa.) Assume the District of Columbia is in Zone 3.

Courtesy of Home Energy Magazine, Lawrence Berkeley Lab, and George Tsongas

Zone ↓	# of stories →	1	1.5	2	3
2	Well-shielded	22.2	20.0	17.8	15.5
	Normal	18.5	16.7	14.8	13.0
	Exposed	16.7	15.0	13.3	11.7
3	Well-shielded	25.8	23.2	20.6	18.1
	Normal	21.5	19.4	17.2	15.1
	Exposed	19.4	17.4	15.5	13.5

n

BTL example: *For a 3-story West Virginia residence (Zone 3) with normal shielding—n=15.1. BTL = 15 cfm x 7 occupants x 15.1 = 1600 CFM_{50}.*

5. Use this simple formula to determine the building tightness limit:

$$\mathbf{BTL\ CFM_{50} = 15\ cfm\ \times\ \#\ occupants\ \times\ n}$$

If the existing CFM_{50} is near or below the BTL, air sealing is not an energy-conservation priority. Air sealing may still be important to prevent humid indoor air from migrating into attics and building cavities.

Pollution control and ventilation may also be priorities for homes testing below the BTL. The importance of pollution control and ventilation depend on answers to the following questions:

- Are sources of moisture like ground water, humidifiers, water leaks, or unvented space heaters causing indoor dampness, high relative humidity, or moisture damage?
- Do occupants complain or show symptoms of building-related illnesses?
- Are there combustion appliances located in the living space?
- Are the occupants smokers?

Pollutant sources combined with tight houses produce poor indoor air quality. Inform residents about removing pollution sources and ventilating their homes. Take appropriate steps during weatherization to reduce pollutants and to install mechanical ventilation if needed.

3.3 Pressure Testing Air Barriers

Leaks in air barriers cause energy and moisture problems in many homes. You can test air barriers for leakiness during blower-door testing. Air-barrier leak-testing avoids unnecessary visual inspection and air-sealing in hard-to-reach areas. Air-barrier pressure testing uses a manometer to measure pressure differences between zones in order to estimate air leakage between zones. Specifically air-barrier leak-testing can:

- Evaluate the airtightness of portions of a building's air barrier, especially floors and ceilings.
- Decide which of two possible air barriers to air seal, for example, the floor versus foundation walls.
- Estimate the approximate leakage area (ALA) of air leaks through a particular air barrier, for the purpose of estimating the materials and labor necessary to seal the leaks.
- Determine whether building cavities like floor cavities, porch roofs, and overhangs are conduits for air leakage.
- Determine whether building cavities, intermediate zones, and ducts are connected by air leaks

Air-barrier leak-testing provides a range of information from simple clues about which parts of a building are leakiest to specific estimates of the airflow and hole size through a particular air barrier like a ceiling.

Primary versus secondary air barriers

Intermediate zones are unconditioned spaces, sheltered within the exterior shell of the house. Intermediate zones include: unheated basements, crawl spaces, attics, enclosed porches, and attached garages. Intermediate zones can be included inside the home's primary air barrier or outside it. Intermediate zones have two potential air barriers: one between the zone and house and one between the zone and outdoors. For example, an attic or roof space has two air barriers: the ceiling and roof.

The primary air barrier should be adjacent to the insulation to ensure the insulation's effectiveness, so testing is important to verify that insulation and primary air barrier are together. The most airtight of these two air barriers is the primary air barrier and the least airtight is the secondary air barrier. Sometimes we're surprised during testing to find that our assumed primary air barrier is actually secondary, and the secondary air barrier is actually primary. The air barrier should be a material that is continuous, sealed at seams, and is itself relatively impermeable to airflow.

Table 3.3: Air Permeance of Building Materials at 50 Pascals Pressure

Material	CFM_{50} per 100 ft^2
5/8". Oriented strand board	0.091
1/2" Drywall	0.26
4-mil air barrier paper	0.26
15# perforated felt	2.5
Concrete block	7.6
5/8" tongue-and-groove wood sheeting	300
6" fiberglass batt	490
1.5" wet-spray cellulose	1100
Based on: "Air Permeance of Building Materials" by Canada Mortgage Housing Corporation. Units converted from all-metric by the author. Values less than 2 would be considered an air barrier by Canadian authorities.	

3.3.1 Very Simple Pressure Tests

You can find valuable information about the relative leakiness of rooms or sections of the home with closable interior doors during a blower-door test.

Interior door test: *Feeling airflow with your hand at the crack of an interior door gives a rough indication of the air leakage coming from that room.*

Listed below are 5 simple methods

1. Feeling zone air leakage: Close an interior door partially so that there is a one-inch gap between the door and door jamb. Feel the airflow along the length of that crack, and compare that airflow intensity with airflow from other rooms, using the same technique. Discovering that there is a lot of leakage coming from one zone and only a little coming from another is this test's limitation.
2. Difference in CFM_{50}: Check the difference in CFM_{50} when an interior door is closed versus when it is open. You will probably have to adjust the

blower door after opening or closing the interior door to restore 50 pascals house pressure. This technique works well for basements, attached garages, hallways in multi-family buildings, crawl spaces with interior access hatches, and other zones that may contain significant air leaks.

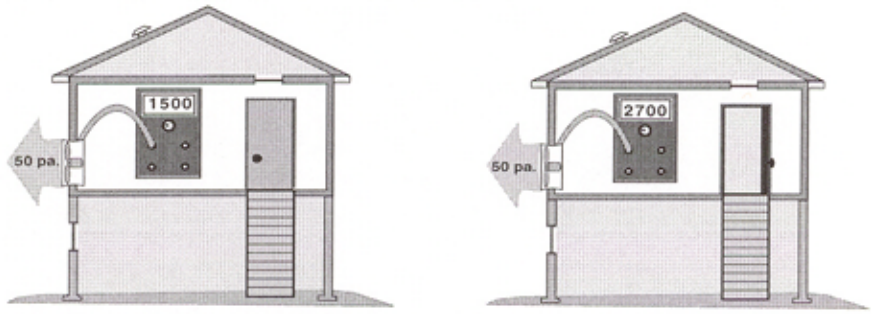

Basement air-leakage test: *Basement door is closed and then opened during a blower door test. The difference in CFM50 between the first and second example means the floor is a fair air barrier. Leakage through the foundation walls and rim joist are responsible for most of the 1200 CFM_{50} difference.*

3. Zone pressure difference: Check the pressure difference between a closed room or zone and the main body of a home. Larger pressures indicate larger potential air leakage within the closed room or zone or a tight air barrier between the zone and main body.

Bedroom test: *This bedroom seems to be partially connected to outdoors when we measure its pressure difference with the home's main body. Find out why.*

4. Observing the ceiling/attic floor: Pressurize the home to 50 pascals and observe the top-floor ceiling from the attic with a good flashlight. Air leaks will show in movement of loose fill insulation, blowing dust, moving cobwebs, etc.
5. Observing smoke movement: Pressurize the home to 50 pascals and observe the movement of smoke through the house and out of its air leaks.

All of these tests are very approximate. Feeling airflow with your hand is crude and inaccurate, but this simple technique has pointed out many air leaks that may have remained hidden without it. Air leakage, restricted by closing a door, may have almost equal alternative paths, rendering tests 2 and 3 inaccurate. However, closing doors to leakier rooms will usually produce a greater reduction in CFM_{50} than closing doors to tighter ones. Leakier rooms will usually have greater pressure differences with the main zone than tighter rooms. Only practice and experience can guide your decisions about the applicability and usefulness of these tests.

3.3.2 Using Manometers to Test Air Barriers

The digital manometer or analog manometer, used for blower door testing, can also measure pressures between intermediate zones, indoors, and outdoors during blower-door tests.

When the blower door depressurizes the house to –50 pascals, the home's intermediate zones will also be depressurized to between 0 and –50 pascals. The amount of depressurization depends on relative leakiness of the zone's two air barriers. For example, in an attic with a very well ventilated roof and a fairly airtight ceiling, the attic won t be depressurized much by a blower-door test. The leakier the ceiling and the tighter the roof, the more an attic will be depressurized. This holds true for other intermediate zones like crawl spaces, attached garages, and basements.

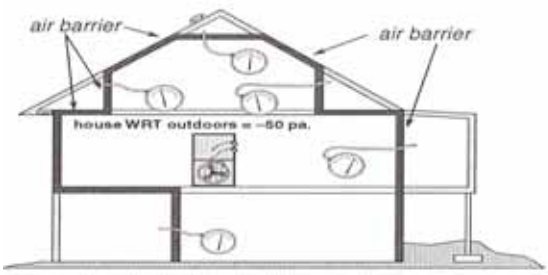

Pressure-testing building parts: *Measuring the pressure difference across the assumed thermal boundary tells you whether the air barrier and insulation are aligned. If the manometer reads close to –50 pascals, they are aligned. Lesser negative readings indicate misalignment.*

3.3.3 Simple Attic Leak Testing

Crawl space-to-outdoors pressure: *Many homes with crawl spaces have an ambiguous thermal boundary at the foundation. Is the air barrier at the floor or foundation wall. Answer: Both are an equal part of the air barrier.*

Air-sealing crews commonly use simple diagnostic techniques like the attic-pressure procedure described below. This procedure assumes that the roof is well-vented. There are many variations of this test used to evaluate other air barriers in other intermediate zones.

1. Depressurize house to –50 pascals with a blower door.
2. Find an existing hole or drill a hole through the ceiling between the conditioned space indoors and the attic.

3. Connect the input port (digital manometer) or the high-pressure port (analog manometer) to a hose connected into the attic.
4. Leave the reference port (digital manometer) or the low-pressure port (analog manometer) open to the indoors.
5. Read the negative pressure given by the manometer. This is the house-to-attic pressure, which will be -50 pascals if the ceiling is airtight and the roof well-vented.
6. If the reading is significantly different from -50 pascals, find the air barrier's largest leaks and seal them.
7. Repeat steps 1 through 5, performing more air-sealing as necessary, until the pressure is as close to -50 pascals as possible.

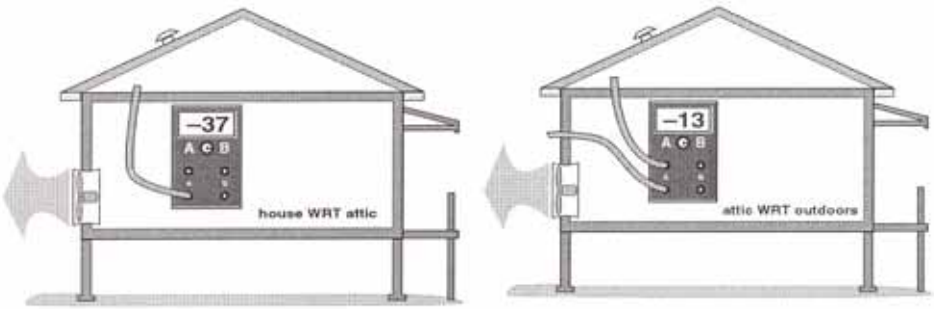

House-to-attic pressure: *This commonly used measurement is convenient because it requires only one hose.*

Attic-to-outdoors pressure: *This measurement confirms the first because the two add up to –50 pascals. This test is preferred by many for accuracy.*

The house-to-attic pressure will be -50 pascals if the ceiling is airtight or if the roof has a large area of roof vents or if the ceiling's air leakage is insignificant compared to vents and air leaks in the roof.

- Readings of 25-to-50 pascals house-to-attic pressure mean that the ceiling is tighter than the roof.
- Readings of 0-to-25 pascals house-to-attic pressure mean that the roof is tighter than the ceiling.
- Readings around 25 pascals house-to-attic pressure indicate that the roof and ceiling are equally airtight or leaky.

3.3.4 Testing Intermediate Zones and Building Cavities

Use the following test procedures for measuring zone pressures in attics, crawl spaces, building cavities, and attached or tuck under garages.

1. Set-up blower door for house air-leakage test.
2. Ensure that the hose to the outside will not be affected by the blower door airflow.

3. Close any openings (door, access hatch) between the intermediate zone and conditioned space, taking care not to pinch hose if it goes through the door or hatchway.
4. Depressurize house to -50 pascals. If the house cannot be depressurized to -50 Pa, depressurize to highest multiple of 5 and use blower door conversion table.
5. Connect hose from zone to input tap on manometer. Connect hose from the outside to reference tap.
6. Record pressure of zone with reference to the outside.

3.3.5 Interpreting Zone Pressure

Pressure readings between the zone and outside indicate whether the air barrier is aligned with the insulation. In all cases, both the air barrier and insulation should be in the same building section. Pressure readings also give clues about the amount of air-sealing work required.

Zone-to-outside readings of 0 to -25 pascals indicate that the air barrier between the living space and zone is tighter than the barrier between the zone and outside (for example, the ceiling is tighter than the roof in an unfinished attic, shown here). This is good in that the primary air barrier is adjacent to the insulation. However, the air barrier (ceiling) can be made tighter if the pressure reading is more negative than -5 pascals. Pressure readings more negative than -5 pascals indicate that bypasses are present in the ceiling. Bypasses should be located and sealed. *See "Sealing Bypasses" in Section 4.1.1.*

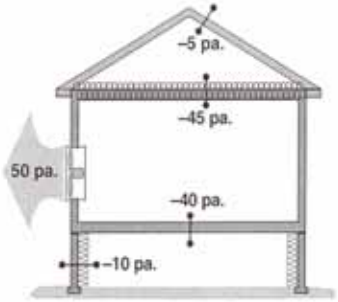

Attic pressure measurements: *Show that the air barrier and insulation are aligned at the ceiling. The crawl-space pressure measurements show that the floor is the air barrier and the insulation is misaligned—installed at the foundation wall.*

Zone-to-outside readings of -25 pascals to -50 pascals indicate that the air barrier between the zone and outside is tighter than the air barrier between the living space and zone. For example, the crawl-space foundation walls are tighter than the floor between crawl space and conditioned area, as shown here. If the crawl space foundation walls are the thermal boundary, holes in the foundation wall should be sealed until the pressure difference between the crawl space and outside is more negative as high as you can get them.

If the floor above the crawl space is the thermal boundary, the air barrier (foundation walls) and the insulation (floor above the crawl space) are misaligned. A decision of where to locate the thermal boundary must be made, followed by appropriate air-sealing and insulation work.

Zone-to-outside readings around -25 pascals indicate that the air barrier between the zone and conditioned space and the air barrier between the zone and outside are equally leaky. If there is currently no insulation, decide where the thermal

boundary should be and perform appropriate air-sealing and insulation work accordingly. *See "Air-Sealing and Insulating" in Section 4.0.*

Generally, the thermal boundary (air barrier and insulation) should be between the conditioned space and attic. The thermal boundary can be either the foundation walls or floor above crawl space. The thermal boundary should always be between the conditioned space and tuck-under or attached garage, to separate the living spaces from this unconditioned and often polluted zone.

Building cavities like wall cavities, floor cavities between stories, and soffits in kitchens and bathrooms can also be tested as described above to determine their connection to the outdoors as shown here.

Porch roof test: *We hope that the porch roof is outdoors because it is outside the insulation. We find, however, that it is partially indoors, indicating that it may harbor significant air leaks through the thermal boundary. If the porch roof were outdoors the manometer would read near 0 pascals.*

Cantilevered floor test: *We hope to find the cantilevered floor to be indoors. A reading of –50 pascals would indicate that it is completely indoors. A reading, less negative than –50 pascals, is a commonly measured, indicating that the floor cavity is partially connected to outdoors.*

3.4 Duct Airtightness Testing

The blower door can be used for duct airtightness testing at the same time that it is testing house airtightness. The goal of the tests explained below is to roughly estimate duct leakage so that a decision can be made about the level of duct sealing necessary. *For information on sealing duct leaks, see "Duct Air-Tightness Standards" in Section 2.6.3.*

3.4.1 Pressure-Pan Testing

Pressure-pan tests can help identify leaky or disconnected ducts. With the house depressurized by the blower door to -50 pascals with reference to the outside, pressure-pan readings are taken at each supply and return register.

1. Install blower door and set -up house for winter conditions. Open all interior doors.

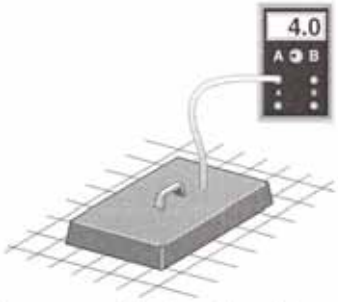

A pressure pan: *Blocks a single register and measures the air pressure behind it, during a blower door test. The magnitude of that pressure is an indicator of duct leakage.*

2. If the basement is conditioned living space, open the basement door. If the basement is considered outside the conditioned living space, close the basement door and open a basement window. For unventilated crawl spaces open the access hatch between the crawl space and outdoors.
3. Turn furnace off. Remove furnace filter. Ensure that all grilles, registers, and dampers are fully open.
4. Temporarily seal any outside fresh-air intakes to the duct system. Seal all registers that are in unconditioned living spaces (supply registers in unconditioned basements, for example).
5. Open attics, crawl spaces, and garages as much as possible to the outside. If it has been determined that the basement is outside the conditioned living space, open basement windows or doors to the outside.
6. Connect hose between pressure pan and the input tap on the digital manometer. Leave the reference tap open.
7. With the blower door at -50 pascals, place the pressure pan completely over a grille or register to form a tight seal. Record the reading.
8. If a grille is too large or a supply register is difficult to access (under a kitchen cabinet, for example), seal the grille or register with masking tape. Insert a pressure probe through the masking tape and record reading.
9. Repeat test for each register and grille in a systematic fashion.

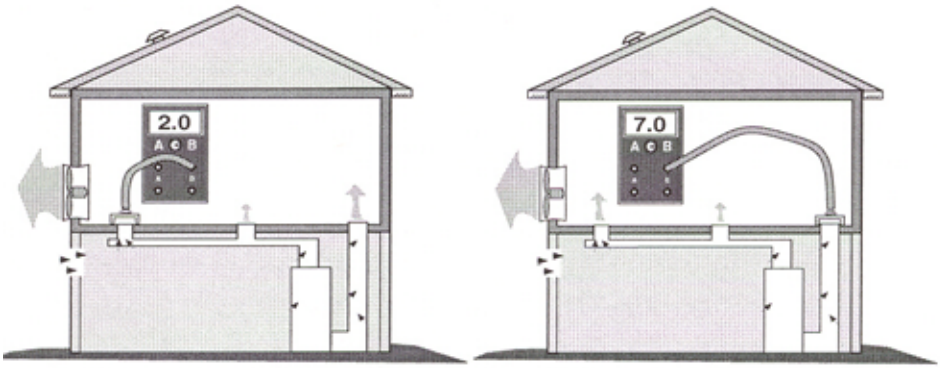

Pressure pan test: *Evaluates the duct system as a part of the home's air barrier by opening a unoccupied basement or crawl space to the outdoors.*

Problem register: *A pressure reading of 7 pascals indicates a major air leak near the tested register.*

Basements are usually considered part of the conditioned living space of a home. Consequently, the door between the basement and living space should be open during pressure-pan testing and no opening need be made between the basement and outdoors. If the basement is accessed from the outside and rarely used, the basement may be considered outside the conditioned living space. In this case, a window or door between the basement and outdoors should be opened and the door between the living spaces and the basement should be opened.

Pressure-pan duct standards

If the ducts are perfectly sealed with no leakage to the outside, no pressure difference (0.0 pascals) will be read during a pressure-pan test. The higher the pressure reading, the more connected the duct is to the outside.

- If three or more readings are greater than 2.0, examine duct system for leaks and repair, especially if ducts are located outside the conditioned living space.
- Following weatherization work, no more than three registers shall have pressure-pan readings greater than 2.0 pascals. No single reading shall be greater than 4.0 pascals
- The best weatherization providers won't accept readings greater than 1.0 pascals.

Attention should be given to registers connected to ducts that are located in areas outside the conditioned living space. These spaces include attics, crawl spaces, garages, and basements as described above. Attention should also given to registers attached to stud cavities or panned joists used as return ducts. Leaky ducts located outside the conditioned living space may show pressure-pan readings in excess of 30 pascals.

3.4.2 Blower Door Subtraction

The blower door subtraction method employs two separate blower door tests: one test with registers open, and a subsequent test with registers blocked. The test assumes that the reduced blower door reading, after the registers are blocked, is due to the elimination of duct leakage from outdoors. For best accuracy, the intermediate zone containing the ducts should be well-connected to the outdoors. If the house to zone pressure is -45 pascals or more the test will be fairly accurate. If the house-to-zone pressure is a smaller negative number, this test will underestimate duct leakage.

1. Take a standard blower door airflow reading (CFM_{50}) for house air leakage: house WRT outdoors = -50 pascals.
2. Tape over all supply and return registers and take another CFM_{50} reading.

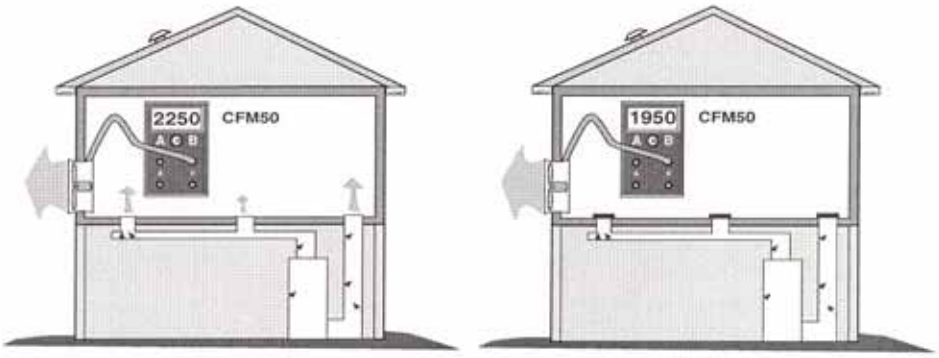

Blower door subtraction: *This test involves two blower door tests, one with the registers open and another with the registers taped closed. The difference between the two CFM_{50} readings is an rough indicator of duct leakage.*

3. Subtract the reading obtained in Step 2 from the reading in Step 1 to arrive at an estimate of duct leakage to the outdoors.

4. Measure the duct-to-house pressure through a hole in the tape at a central register or at a hole in a supply or returns plenum.
5. Find the correction factor corresponding to the duct-to-house pressure measured in Step 4.
6. Multiply the correction factor times the duct leakage estimate from Step 3.

Blower-door subtraction standards

This test gives a very approximate duct-air-leakage measurement, which is not accurate for small-to-moderate duct leakage. The blower door measures large airflows, then subtracts them to get a much smaller figure for duct leakage. Small percentage errors between the two readings, due to wind or other variables, produce large errors in estimated duct leakage. The smaller the duct leakage, the greater the error. Duct leakage of 200-to-500 CFM_{50} is common in existing duct systems needing repair.

Setting realistic goals for blower door subtraction depends on the skill level of the technicians. The best technicians may be able to reduce CFM_{50} duct leakage to around 2-to-3 percent of conditioned-floor area. Less experienced technicians may be satisfied with a blower door subtraction at CFM_{50} of 10 percent of conditioned-floor area.

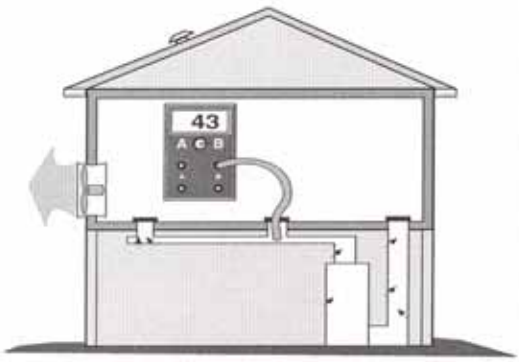

Correction factor for blower door subtraction: *The pressure inside the sealed ducts serves as a correction factor to the CFM_{50} difference. Match the duct pressure with the correction factors shown at right.*

House-WRT-Duct Pressure	Subtraction Correction Factor	House-WRT-Duct Pressure	Subtraction Correction Factor
50	1.00	30	2.23
49	1.09	29	2.32
48	1.14	28	2.42
47	1.19	27	2.52
46	1.24	26	2.64
45	1.29	25	2.76
44	1.34	24	2.89
43	1.39	23	3.03
42	1.44	22	3.18
41	1.49	21	3.35
40	1.54	20	3.54
39	1.60	19	3.74
38	1.65	18	3.97
37	1.71	17	4.23
36	1.78	16	4.51
35	1.84	15	4.83
34	1.91	14	5.20
33	1.98	13	5.63
32	2.06	12	6.12
31	2.14	11	6.71

Courtesy: The Energy Conservatory

3.5 Duct-Induced Room Pressures

An improperly balanced air-handling system can cause comfort, building-durability, and indoor-air-quality problems. Duct-induced room pressures can increase air leakage from 1.5 to 3 times compared to when the air handler is off.

This test measures pressure differences between the main body of the house and each room, including the combustion appliance zone (or basement). Pressure difference greater than +3.0 pascals or more negative than -3.0 pascals should be corrected. *For information on reducing duct-induced room pressures, see "Duct Improvements to Increase Airflow and Improve Comfort" in Section 2.6.5.*

3.5.1 Measuring Duct-Induced Room Pressures

1. Set-up house for winter conditions. Close all windows and exterior doors. Turn-off all exhaust fans.
2. Close all interior doors, including door to basement.
3. Turn on air handler.
4. Place hose from input tap on the manometer under the door. Leave reference tap open to main body of house.
5. Read and record measurement for each room.

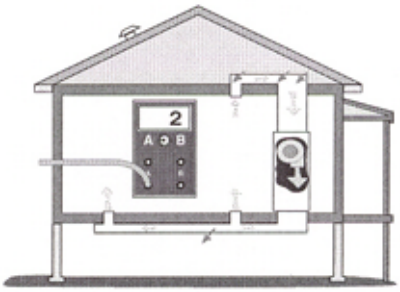

Dominant return leaks: *When return leaks are larger than supply leaks, the house shows a positive pressure with reference to the outdoors.*

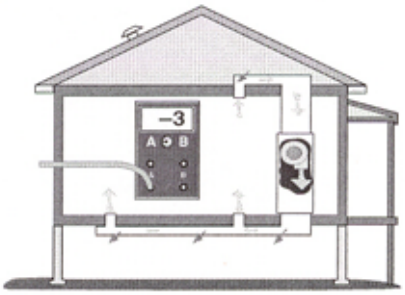

Dominant supply leaks: *When supply leaks are larger than return leaks, the house shows a negative pressure with reference to the outdoors.*

3.5.2 Interpreting Room Pressures

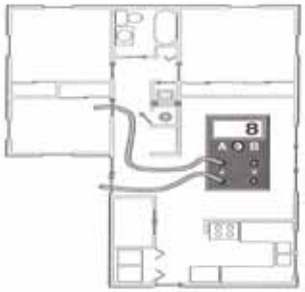

Blocked return path: *With interior doors closed, the large positive pressure in the bedroom is caused by the lack of a air return register in the bedroom. The airflow in this forced-air system is unbalanced, causing this pressure, which forces room air through the room's air leaks.*

If pressure difference is more than + or- 3.0 pascals with the air handler operating, pressure relief is necessary. To estimate the amount of pressure relief, slowly open door until pressure difference drops between +3.0 pascals and -3.0 pascals. Estimate area of open door. This is the area required to provide pressure relief. Pressure relief may include undercutting the door or installing transfer grilles. *For information on the danger of depressurized combustion zone, see "Worst-Case Depressurization Test" in Section 2.3.2.*

4.0 AIR SEALING AND INSULATING

These specifications address energy efficiency measures designed to improve the building's thermal boundary. Perform air leakage testing and evaluation before beginning air-sealing work. *See "Assessing Air Leakage through the Building Shell and through Ducts" in Section 3.0*. Insulation requires visual inspection to determine the cost-effectiveness of adding insulating value to a building through insulation or window treatments. Reducing air leakage and adding insulation use the same approach to selection. The most needy areas are retrofitted first and then less needy areas are retrofitted as time and budget permit.

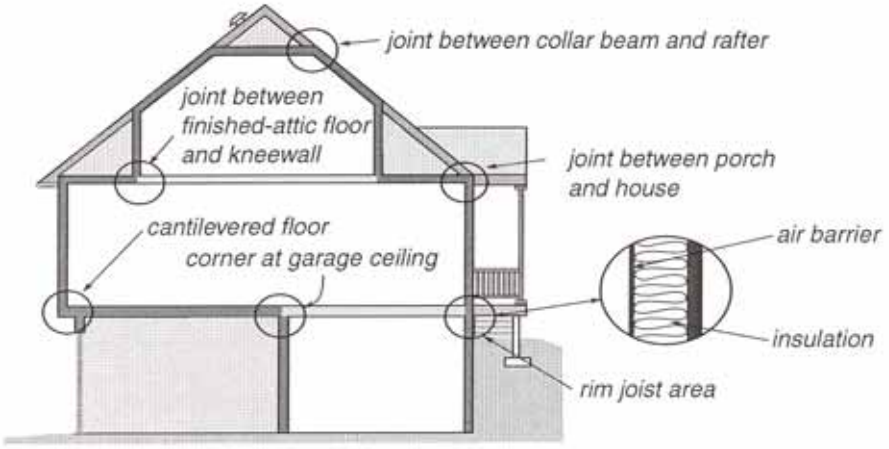

Thermal boundary flaws: *Corners in the thermal boundary are places where insulation and the air barrier may be incomplete.*

Evaluate all insulation and air-sealing measures using NEAT, EA-QUIP, or another approved decision-making tool.

4.1 Reducing Air Leakage

Air leakage in homes represents from 5% to 40% of annual heating costs. Air-leakage reduction is one of weatherization's most important functions, and often the most difficult function.

The main functions of air-leakage reduction are to:

- Save energy
- Increase comfort
- Protect insulation's thermal resistance
- Avoid moisture migration into building cavities

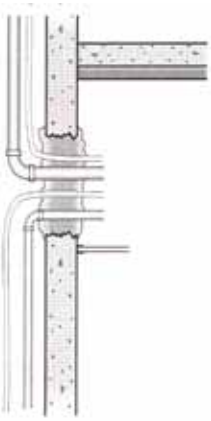

Large holes: *Tradesmen often knock large holes in concrete walls without patching them. These can be large air leaks.*

Air leaks into and out of the building by three main ways:

- Bypasses, which are significant flaws in the home's air barrier.

- Seams between building materials.
- The building materials themselves. *See "Air Permeance of Building Materials at 50 Pascals Pressure" in Section 3.3.*

The ultimate goal of air leakage reduction is to establish an effective air barrier.

Before air sealing, be aware of all air-pollution and house-pressure hazards. State and local governments may set standards for airtightness levels and ventilation. *See "Building Tightness Limits (BTL)" in Section 3.2.3.*

4.1.1 Sealing Bypasses

Bypasses are holes and gaps in the air barrier. The effort worth expending to seal a bypass depends primarily on its size. Bypasses will be found between the conditioned space and attic, crawl space, attached garages, and porch roofs. *For information on measuring and locating air leaks, see "Using Manometers to Test Air Barriers" in Section 3.3.2.*

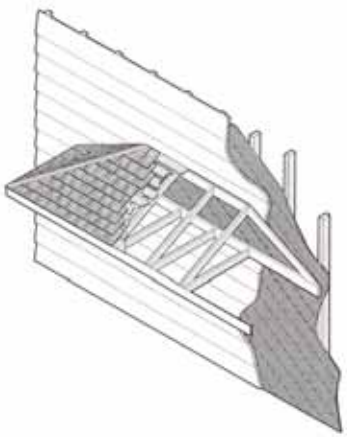

Porches: *Often create a substantial air leak because of all their joints and because there may be no siding or sheathing behind the porch.*

It is always preferable to use strong air-barrier materials like plywood or drywall to seal bypasses. These materials should be attached with mechanical and/or adhesive bonds. Strong materials with strong bonds are best practice because air barriers must be able to resist severe wind pressures.

Sometimes bypasses are easily accessible and sometimes not. When they are not easily accessible, technicians sometimes blow densely packed cellulose insulation into surrounding cavities, hoping that the cellulose will resist airflow and clog cracks between building materials.

The following are examples of bypasses and how to seal them. All bypasses are to be sealed prior to insulating except where cellulose is also being use to seal bypasses.

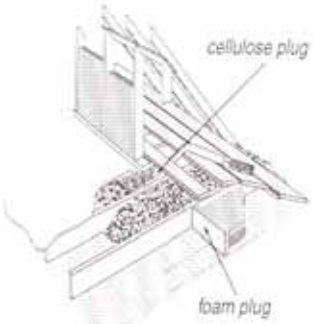

Cellulose or foam board plugs: *Options for sealing these large air leaks between the ventilated attic and the interior floor cavity.*

- Joist spaces under knee-walls in finished attic areas: Connect plaster-wall with the plaster ceiling of the floor below by creating angled seal under the kneewall or by blowing short sections of the floor cavity with densely packed cellulose.
- Kitchen or bathroom interior soffits: Seal the top of the soffit with plywood or drywall, fastened and sealed to ceiling joists and soffit framing.

- Two-level attics in split-level houses: Seal the wall cavity with a rigid material fastened to studs and wall material.

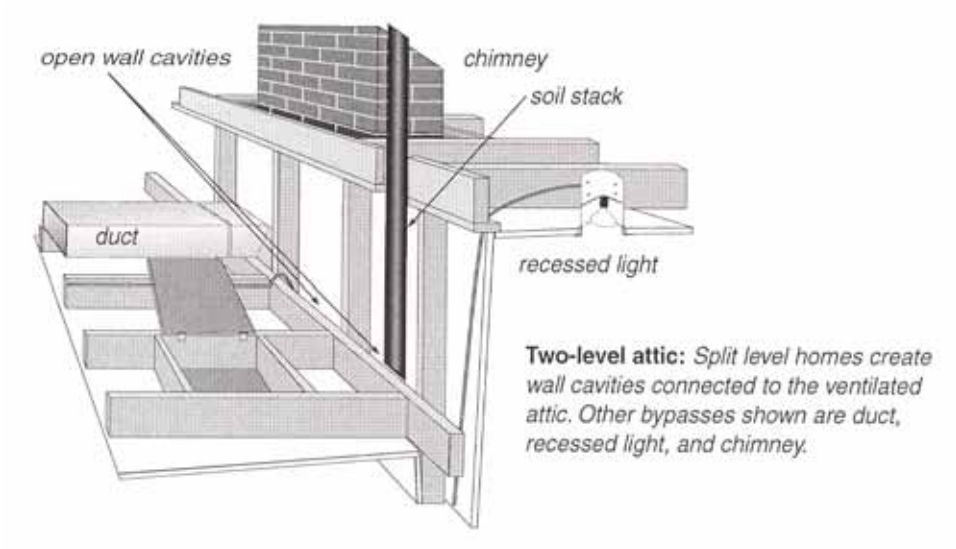

- Tops and bottoms of balloon-framed interior partition wall cavities, missing top plates: Seal with rigid barrier, like 1/4-inch plywood or l-inch foam sealed to surrounding materials with caulk or liquid foam.

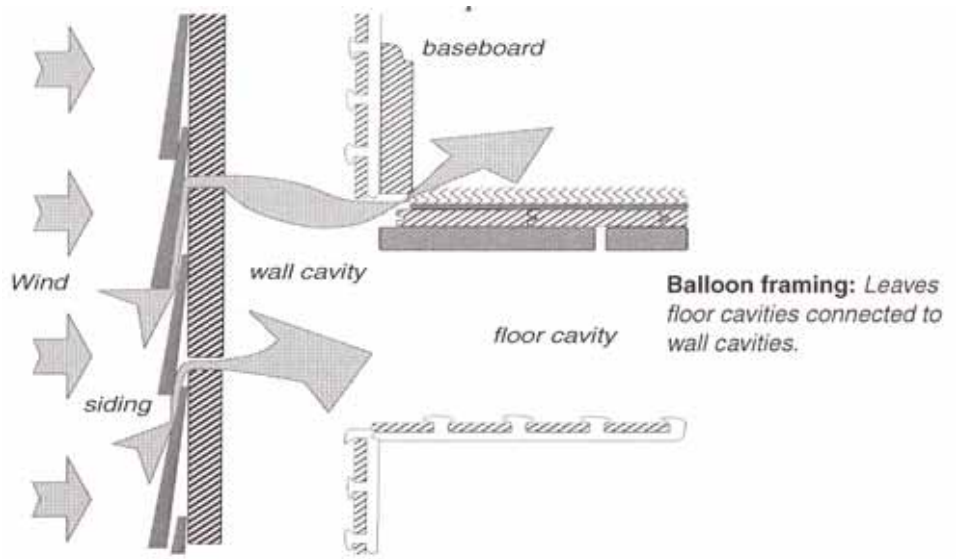

- Chimney and fireplaces: Seal chimney and fireplace bypasses with sheet metal (minimum 28 gauge thickness) and seal to chimney or flue and ceiling structure with a high temperature sealant or chimney cement.

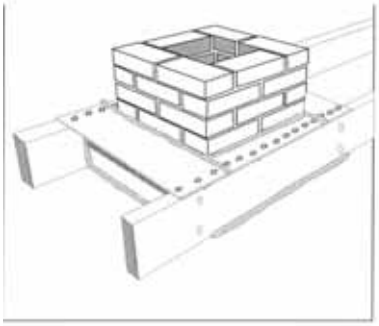

Chimney chases: *Sealed with non-combustible sheet metal and high-temperature silicone sealant.*

- Soil stacks, plumbing vents, open plumbing walls: Seal Joints with expanding foam or caulk. If joint is too large, stuff with fiberglass insulation and foam over the top to seal the surface of the patch.
- Housings of exhaust fans and recessed lights: Caulk joints where housing comes in contact with the ceiling.

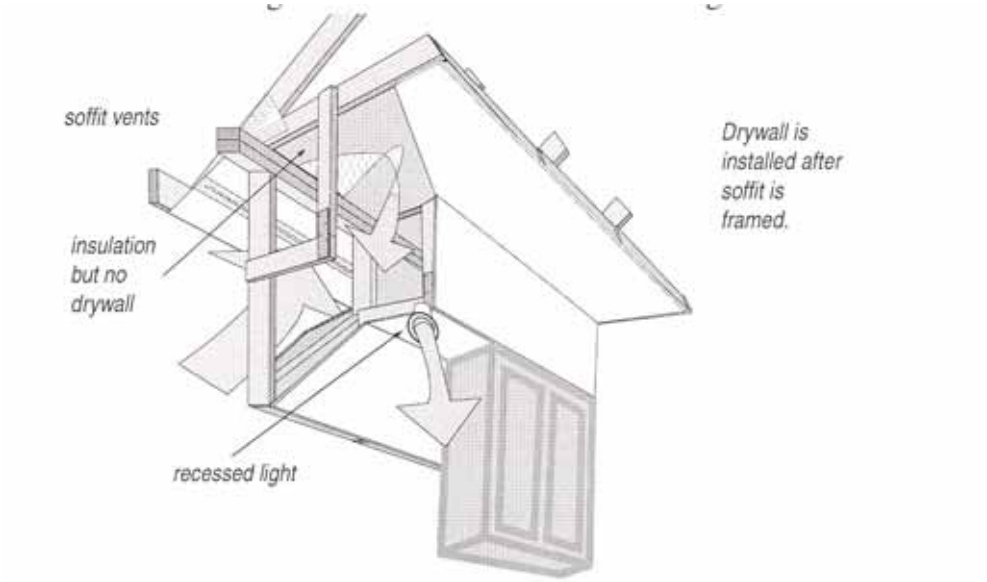

Kitchen soffits: *Are often open to both the wall cavity and ventilated attic. Any hole in the soffit creates a direct connection between the kitchen and attic.*

- Duct boots and registers: Caulk or foam joint between duct boot and ceiling, wall, or floor finish if ducts are located in attic, crawl space, or attached garage.
- Wiring and conduit penetrations: Seal penetration with caulk.
- Duct chases: If chase opening is large, seal with a rigid barrier such as plywood or drywall and seal the new barrier to ducts. Smaller cracks between the barrier and surrounding materials may be foamed or caulked.

- Bathtubs and shower stalls: Seal holes and cracks from underneath with expanding foam. Seal large openings with rigid materials caulk or foamed at edges.
- Attic hatches and stairwell drops: Weatherstrip around doors and hatches. Caulk around frame perimeter.
- Other openings in the air barrier: Seal with rigid material, caulk, or expanding foam depending upon size of opening.

4.1.2 General Infiltration

The following general infiltration measures may be done only if found to be cost effective as determined by sequential blower door-guided air sealing.

- Cracks in exterior window and door frames should be sealed. If the crack is deeper than 5/16-inch, it must be backed with a material such as flexible polyurethane, neoprene butyl rod, fiberglass, or sponge rubber specifically manufactured for this purpose and then sealed with caulk. Any existing loose or brittle material must be removed before being recaulked. Caulking should be applied in a manner that seals the area thoroughly and is neat in appearance.

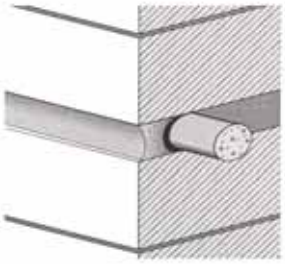

Backer rod: *Use it to support caulk for sealing uniform gaps, and use liquid foam for sealing irregular gaps.*

- Joints in sill plate (mud sill) and around utility openings in siding and foundation shall be sealed in an appropriate manner. When a space between two metal surfaces is to be sealed, only a butyl or silicone caulk shall be used. Cracks between two masonry surfaces should be sealed with a cement patching compound or mortar mix. If the opening is deeper than 3/8-inch, follow procedures described above.

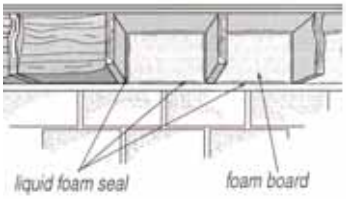

Insulate rim joists: *Seal the joints with caulking before insulating with fiberglass batts. It's better to insulate the rim joist with foam board, cut to size with adequate clearances to seal edges with liquid foam.*

- Interior joints shall be caulked. These joints include where baseboard, crown molding and/or casing meet the wal1/ceiling/floor surfaces. Gaps around mounted or recessed light fixtures and ventilation fans shall be caulked.

Recessed light fixtures: *These are major leakage sites, but these fixtures must remain ventilated to cool their incandescent bulbs. Plug the top of the soffit with drywall.*

- Insulation gaskets are useful in trying

to attain a tight interior air barrier, but not cost effective in every case.

4.2 Installing Insulation

The building shell's thermal resistance is increased by adding insulation. Insulation reduces heat transmission. Combined with the home's air barrier, insulation forms the thermal boundary. *Make sure that the air barrier and insulation will be aligned using procedures outlined in "Pressure Testing Air Barriers" in Section 3.3.*

Insulation should cover the entire area intended for insulation without voids or edge gaps. Blown insulation should be installed at sufficient density to resist settling, according to manufacturer's instructions. Insulation should be protected from air migrating around and through it by an effective air barrier. Insulation should be protected from moisture.

Wall cavities should be filled with insulation completely, from top to bottom and side to side. The retrofitted depth of attic insulation or floor insulation should be determined by a decision-making tool like the NEAT or EA-QUIP computer audits.

Observe lead-safe weatherization practices with all tasks that may disturb interior paint.

4.2.1 Attic Insulation

Air leakage testing and air sealing should always precede attic insulation because attic insulation is not itself an air barrier. Attic insulation needs an air barrier adjacent to it to be effective. Air moving through insulation reduces its R- value and can deposit moisture in the insulation. *See "Simple Attic Leak Testing" in Section 3.3.3 and "Sealing Bypasses" in Section 4.1.1 for more information.*

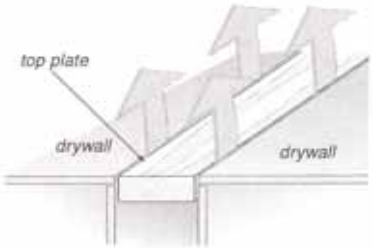

Top-plate leakage: *Even thin cracks between the top plate and drywall can be important air leaks because there are many linear feet of these cracks.*

Safety

Comply with the following fire and electrical safety procedures before insulating:

- Box around recessed light fixtures and exhaust fans to prevent overheating and/or fire.
- Install collars or dams around masonry chimneys, B-vent chimneys, and manufactured chimneys after sealing bypass.
- Wood-stove manufactured chimneys should have ventilated insulation

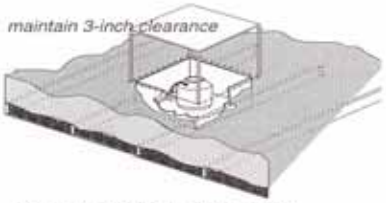

Covering recessed light fixtures: *Covering recessed light fixtures with fire-resistant drywall or sheet-metal enclosures reduces air leakage and allows insulation to be blown around the box.*

shields.

- If funds are available, attic knob-and-tube wiring may be replaced. Add insulation beneath knob-and-tube maintaining a one-inch air space between insulation and wiring. Or, create non-metallic barriers to retain minimum one-inch air space along side of knob-and-tube wiring.
- In some cases, a home may have been rewired and the wiring left in place. The assessor must confirm that the knob-and-tube wiring is not in service before covering with insulation.
- Repair frayed wiring. Wiring splices must be enclosed in metal or plastic electrical boxes, fitted with cover plates.
- Covered electrical junction boxes may be covered with insulation, if appropriately marked.
- lf rolled metal is used for as a barrier around heating producing devices or chimneys, it must be fastened securely to the attic joist in such a manner as to not allow the barrier to collapse. Barriers shall extend at least 4 inches above the insulation and be installed in such a fashion to keep insulation a minimum of 3 inches away from the insulation.
- OSHA-approved respirators or dust masks must be worn when blowing insulation.
- Prefer gas-powered insulation machines or electric machines powered by a gas generator to connecting to the customer's electrical system, which can trip breakers, blow fuses and cause other electrical problems.

Preparation for attic insulation

Observe the following important preparatory steps before installing attic insulation:

- Repair all roof leaks before insulating attic. If roof leaks cannot be repaired, do not insulate attic.
- All kitchen and bath fans currently venting into the attic must be revented outdoors through roof fittings. Fans without operating backdraft dampers should be repaired, equipped with backdraft dampers, or the fan should be replaced. Check new fans for proper damper operation. Use rigid aluminum or galvanized pipe for venting whenever possible and insulate the pipe to prevent condensation.

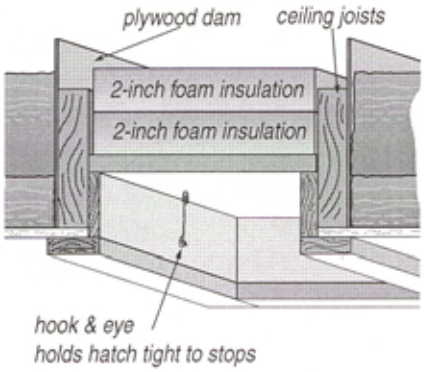

Insulated attic hatch: *Foam insulation prevents this area from being a thermal weakness. Building a dam prevents loose-fill insulation from falling down the hatchway.*

- Install chutes, dams or other blocking devices to prevent blown insulation from plugging air channels from soffit vents into the attic, to maximize amount of insulation that may be installed over top plates, and to prevent wind washing of the insulation by cold air entering soffit vents.

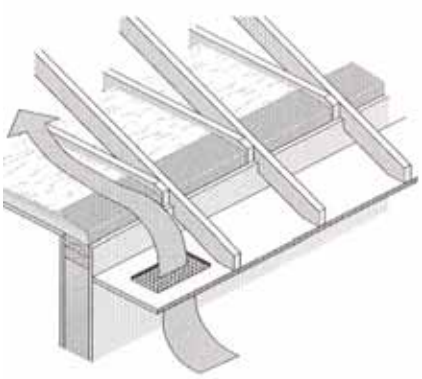

Chute or dam: *Prevents wind washing and*

- Install an insulation dam around the attic access hatch. Build the dam with rigid materials like plywood, scrap drywall, or thick fiberglass batts. The dam's purpose is to prevent loose-fill insulation from falling out of the attic hatch when opened. Install latches, sash locks, gate kooks or other positive closure to provide substantially airtight hatch closure where appropriate.

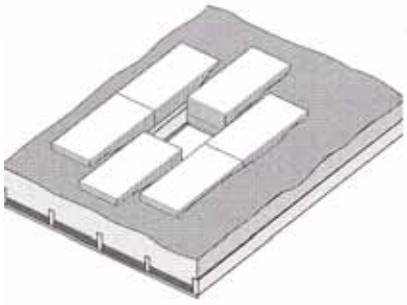

Batts as insulation dam: *Some insulation technicians insulate the area around the hatch with 8-inch unfaced batts, creating a dam to stop loose-fill insulation from falling down the hatchway.*

- Air leakage and convection can significantly degrade the thermal resistance of attic insulation. Before insulating attic, seal bypasses as described previously. If attic bypasses are not properly sealed, increasing attic ventilation may increase the air leakage rate of the home.

Attic venting

Attic ventilation is intended to remove moisture from the attic during the heating season and to remove solar heat from the attic during the cooling season.

Low and high attic ventilation: *Creates effective air movement to keep attics dry and also help to keep them from overheating in summer.*

Many building codes require a minimum ratio of one square foot of net free area to 150 square feet of attic area if a vapor barrier is not present. With a vapor barrier, one square foot per 300 square feet of attic area is required.

Many building scientists and technicians now believe that these requirements are arbitrary and possibly excessive. Attic venting increases air leakage by increasing the stack effect. This increased air leakage through the ceiling can deposit moisture in the insulation the opposite of the drying effect attic ventilation is intended to accomplish. All attics and especially abundantly ventilated ones should be thoroughly air-sealed.

Attic ventilation is most effective when there are equal amounts of low intake vents through soffit or eaves and higher exit vents on the roof. Gable vents should be installed on both gable ends, positioned to allow for cross ventilation. Vents shall be installed in accordance with manufacturers, instructions and sealed with an appropriate sealant. Vents should be installed in a manner to prevent the entrance of snow, rain, insects and rodents.

Install an eave chute (proper vent) to ensure free movement of air through soffit vents into the attic and to prevent wind-washing of the insulation by incoming cold air.

4.2.2 Blowing Attic Insulation

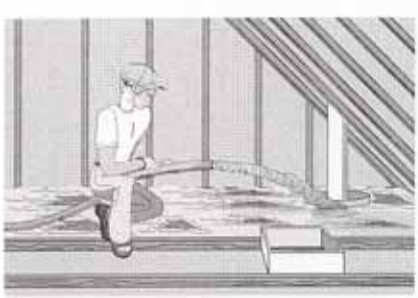

Blown-in attic insulation: *Is more continuous than batts and produces better coverage. Insulation should be blown at a high density to reduce settling.*

Blown insulation is preferred to batt insulation whenever possible because blown insulation forms a seamless blanket. Blowing attic insulation at the highest achievable density helps resist settling and prevent convection currents from moving within the insulation.

The highest density is achieved by moving the most insulation through the hose with the available air pressure.

The more the insulation is packed together in the blowing hose, the greater its installed density will be.

Attic insulation should be installed to a cost effective R-value as determined by NEAT or EA-QUIP. If attic has a closed floor cavity, dense pack the cavity between ceiling and flooring. Do not insulate cavity if live knob-and-tube wiring is present beneath attic flooring.

Insulation should be installed to a uniform depth according to manufacturers' specifications for proper coverage (bags per square foot ratio) to attain the desired R-value at settled density.

Do not blow loose-fill insulation tight against the roof deck.

4.2.3 Installing Batt Insulation

Blown insulation is preferred to batt insulation because it covers better and is seamless. If batt insulation must be used, then it must be installed in such a manner to ensure tight fit between ceiling joists. Allow no voids or gaps between batts or between batts and ceiling joists, because these imperfections reduce R-value significantly. Insulation must fill joist cavity and provide uniform and complete coverage. If insulation has vapor barrier backing, the vapor barrier shall be toward heated space. When insulation with vapor barrier is installed over existing insulation, the vapor barrier should either be removed or slashed, to allow drying of the insulation should it get wet.

4.2.4 Finished Attic

The finished attic consists of five sections.

1. Exterior finished attic walls (end walls of finished attic*). See "Wall Insulation" in Section 4.2.5.*
2. Collar beams (above finished attic).
3. Sloped roof (where wall roof finish is installed directly to roof rafters).
4. Knee walls (between finished attic and unconditioned attic space).
5. Outer ceiling joists (between knee wall and top plate of exterior wall).

Consider the following specifications when insulating finished attics:

- Seal attic bypasses before insulating. Seal joist spaces under knee wall by creating a rigid seal under the knee wall or by blowing cellulose insulation into the floor cavity until it plugs the cavity with a densely packed mass of insulation. *See "Sealing Bypasses" in Section 4.1.1.*
- Where possible, insulate sloped roof with dense pack cellulose.

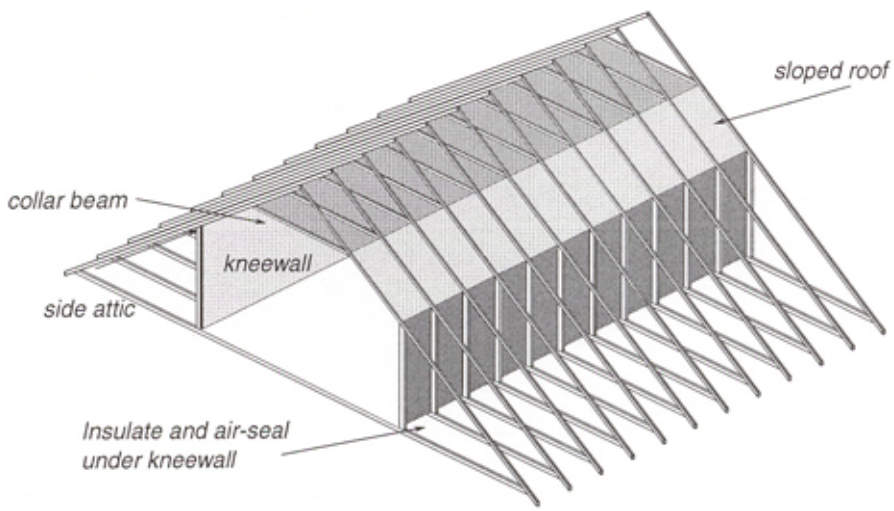

Finished attic: *Requires a variety of insulation techniques to completely insulate.*

- Insulate knee walls with maximum R-value as allowed by stud-cavity depth. Extend insulation down to ceiling of conditioned space below. Ensure that joist cavity has been air-sealed with a solid material.
- When knee-wall area is used for storage, cover insulation with a vapor-permeable material such as house wrap to prevent exposure to insulation fibers.
- When knee-wall attic is considered part of the conditioned space, insulate rafter cavity with maximum R-value as allowed by rafter-cavity depth. The floor cavity (rim) must be air-sealed and insulated.

- Insulate access knee-wall hatches with minimum R-13 insulation. Insulate collar beam access hatches with minimum R-19 insulation. Weatherstrip and provide positive closure (latch, sash locks, gate hooks, etc.) to hatches where appropriate.

Walk-up stairway and door

Think carefully about how to establish a continuous insulation and air barrier around or over top of the attic stairway. If possible, install a hinged, insulated, and weatherstripped hatch door.

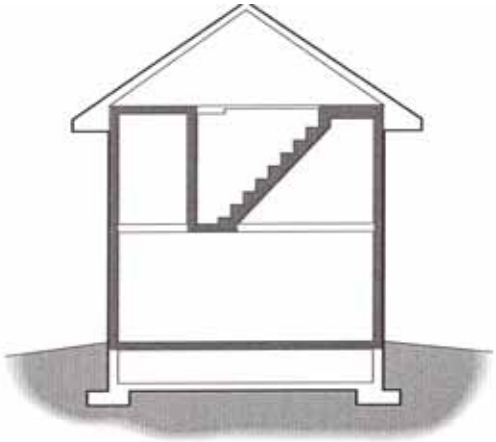

Attic stairway walls and stairs: *Insulating and air sealing these is one way of establishing the thermal boundary around such an attic access.*

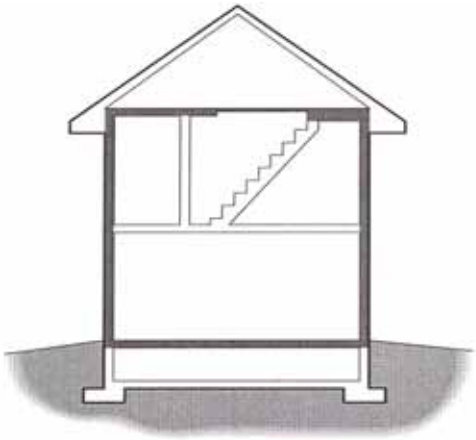

Insulating and weatherstripping the attic door: *Air sealing around the doorway is alternative way of establishing the thermal boundary here.*

If attic is accessed by a stairwell and standard vertical door, blow dense-packed cellulose insulation into walls of stairwell. Install threshold or door sweep, and weatherstrip door. Also blow packed cellulose insulation into the cavity beneath the stair treads and risers.

When planning to insulate walls and stairway, investigate barriers that might insulation from filling cavities you want to fill and what passageways may lead to filling other areas (like closets) by mistake. Balloon-framed walls and deep stair cavities may prevent blown insulation from being cost-effective.

Attic insulation certificate

A certificate must be posted in the attic (near access hatch or door to attic) and a copy given to the homeowner stating the type and brand of insulation used, square footage, R-value, quantity (number of bags or blankets), date installed, name of installer and agency name.

An explanatory note must be included in the file when attic or sidewalls cannot be insulated, due to unusual siding type, lack of owner’s permission, or other reason.

4.2.5 Wall Insulation

Installing insulation with a uniform coverage and density is very important for wall insulation because wall cavities are like chimneys: convection currents or air leakage can significantly reduce insulation's thermal performance.

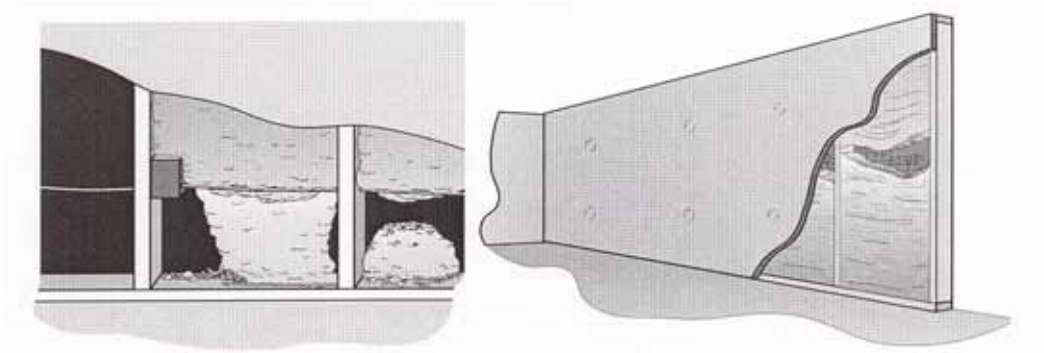

Blowing insulation using a directional nozzle: *Through one or two holes usually creates voids inside the wall cavity. Insulation won't reliably blow at an adequate density more than about one foot from the nozzle. This is why tube-filling is superior.*

Densely packed cellulose wall insulation reduces air leakage through cracks inside walls and other closed building cavities because the fibers are driven into the cracks by the blowing machine.

Where you find incomplete wall insulation, uninsulated walls or uninsulated wall sections, insulation should be added to provide complete coverage for all the home's exterior walls.

Two methods for installing sidewall insulation are used within the Mid-Atlantic Region: dense-pack method (one-hole) or the two-hole method. The dense-pack method is preferred because it ensures that wall insulation achieves the correct coverage and density.

Preparation for wall insulation

- Inspect walls for evidence of moisture damage. If existing condition of the siding, sheathing, or interior wall finish indicates an existing moisture problem, no sidewall insulation should be installed until the moisture problem has been corrected.
- Seal gaps in external window trim and other areas that may admit rain water into the walls.
- Inspect indoor areas on exterior walls for places where blown insulation must not go. Examples are electric wall heaters, wall furnaces, pocket doors, closets, cabinets, wall ducts, and through unsealed tops and bottoms of balloon-framed walls.
- Inspect indoor areas on exterior walls to assure that they are strong enough to withstand the application process. Inspect for interior openings from which insulation may escape, such as pocket doors, balloon framing and unbacked cabinets, soffits, and closets. Seal openings as necessary.

- Inspect walls for live knob-and-tube wiring. Don't insulate walls with live knob-and-tube wiring. Attempts should be made to re-wire walls so they can be insulated if funds are available.
- Avoid drilling through siding. Where possible, carefully remove siding and drill through sheathing.
- If siding cannot be removed, obtain homeowner's permission to drill through siding or interior finish. Practice lead-safe weatherization when drilling through interior walls.
- Drilling holes through asbestos tiles or brick veneer is not advisable. Homes with these siding materials may be insulated from the inside, but be sure to obtain written approval from the home owner. Holes drilled for insulation must be finished and returned to condition as close to original as possible.
- Probe all wall cavities through holes, as you drill them, to identify fire blocking, diagonal bracing, and other obstacles.
- After probing, drill whatever additional holes are necessary to ensure complete coverage.

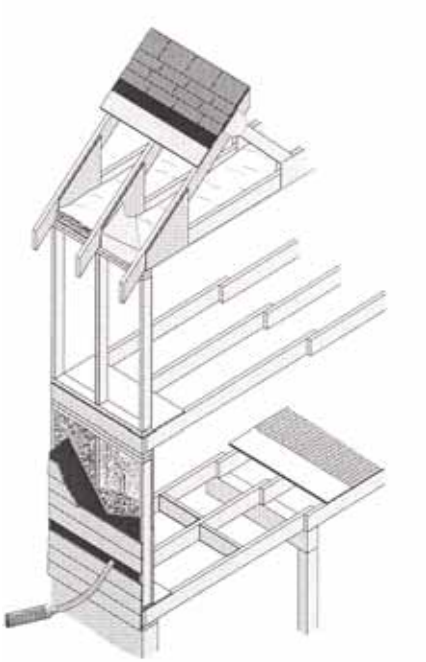

Tube-filling walls: *Can be accomplished from inside or outside the home. It is the preferred wall-insulation method because it is the only reliable way for achieving a uniform coverage and density.*

Dense-packed wall insulation

- Drill minimum 2-to-3-inch diameter holes to access stud cavity. To prevent settling, cellulose insulation must be blown at a minimum of 3.5 pounds per cubic foot density. This minimum density translates into one pound per square foot in a 2-by-4 wall cavity. Blowing cellulose insulation this densely requires a fill-tube.
- Dense-packed wall insulation is best installed using a blower equipped with separate controls for air and material feed.
- Marking the fill-tube in one-foot intervals allows the person blowing insulation to verify the correct penetration of the tube into the wall.
- Starting with several full-height, unobstructed wall cavities allows the crew to measure the insulation density. Start with an empty hopper. Fill the hopper with a bag you've weighed. An 8-foot cavity should consume a minimum of 10 pounds of cellulose insulation.

Insulation hoses, fittings, and the fill tube: *Smooth, gradual transitions are important to the free flow of insulation.*

- Except as previously noted, fill all wall cavities.
- Seal holes with plugs before replacing siding.
- If for some reason siding could not be removed, use wood plugs for patching holes. The wood plugs must be shaved flush, spackled and painted.
- Insulation should be installed in accordance with the manufacturers recommended application procedures.
- With balloon-framed walls, try to blow an insulation plug in each floor cavity to insulate the perimeter between the two floors and to seal the floor cavity against being a conduit for air migration.

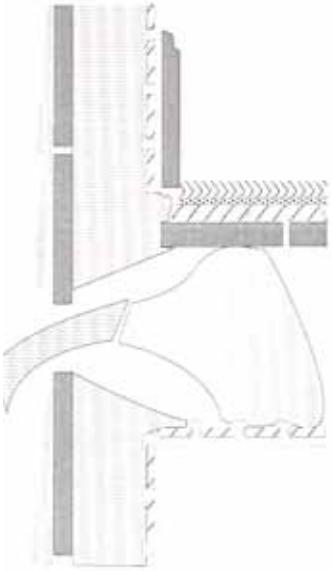

Filling floor-joist cavities: *Reduces air leakage through balloon-framed homes.*

Two-hole method

The two-hole method is not a preferred wall-insulation method because voids and sub-standard density are common. When using this method, employ a powerful blowing machine, preferably one with a gasoline engine.

- Drill two one-inch diameter holes into each stud cavity.
- Holes are to be located no more than 2 feet between the top plate and the top holes, 2.5 feet between the bottom plate and bottom holes.
- Examine wall cavity with wire probes or steel tape to determine location of cavities around window and door areas.
- Insulation to be installed in accordance with manufacturers recommended application procedures.
- All wall cavities around windows and doors are to be filled with insulation.

Open-cavity wall insulation

Fiberglass batts achieve their rated R-value only when installed very carefully. If there are gaps between the cavity and bat at the top and bottom, the R-value can be reduced by as much as 30 percent. The batt should fill the entire cavity without spaces in corners or edges.

- If possible, use unfaced friction-fit batt insulation. Fluff to fill entire wall cavity.
- Staple faced insulation to outside face of studs no inset stapling.
- Batt insulation must be cut to the exact length of the cavity. A too-short batt creates air spaces above and beneath the batt, causing convection. A too-long batt will bunch up, creating air pockets. Air pockets and convection currents significantly reduce insulation's thermal resistance. Each wall cavity should be completely filled with batt insulation.
- Split batt around wiring rather than letting the wiring bunch the batt to one side of the cavity.
- Insulate behind and around obstacles with scrap pieces of batt before installing batt.
- Install vapor retarder with permeability less than 1 on the warm in winter side of the insulation. Vapor retarder should be well fastened at all seams and edges.
- Installed fiberglass insulation exposed to the interior living space must be covered with minimum 1/2-inch drywall or other material that has an ASTM flame spread rating of 25 or less.

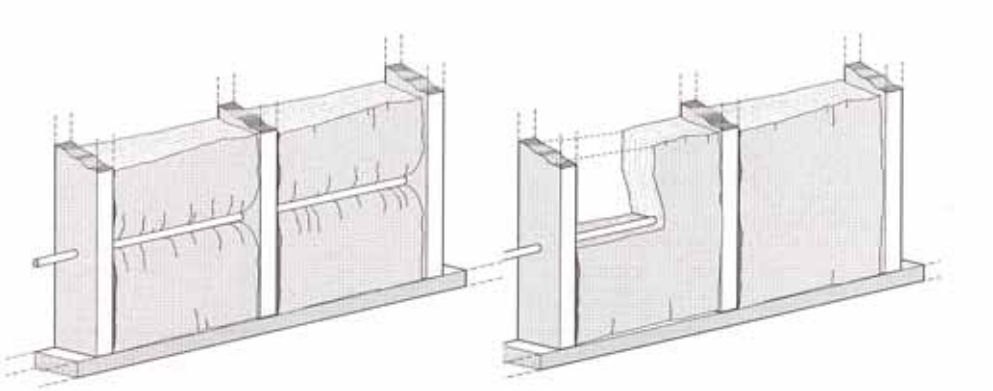

Fiberglass batts, compressed by a cable: *Reduces the wall's overall R-value by creating a void between the wire and interior wallboard.*

Batt, split around a cable: *The void is avoided and the batt attains its rated R-value.*

Completion of wall insulation

Upon completion of sidewall insulation, duct system should be inspected to assure that ducts are free of insulation. Turn on air handler and look for signs of insulation. Also check closets and cabinets for signs of insulation.

4.2.6 Floor Insulation and Foundation Insulation

With heated, occupied basements, the obvious choice is to insulate the basement walls and to establish the air barrier at the walls. However, the choice between insulating the floor or the foundation is often not an easy one for homes with unused basements or crawl spaces. To establish an effective thermal boundary,

the insulation and air barrier should be adjacent to each other. Establishing an effective air barrier comparable to the air barriers in the house walls and ceiling- may be difficult.

Floor insulation is generally preferred where there are crawl space moisture problems, the building has a relatively large perimeter and a relatively small floor area (mobile homes, for example) or where the foundation wall surface is too irregular to permit foundation insulation.

With either floor insulation or foundation insulation, install a ground air/moisture barrier.

Any ducts from exhaust fans that terminate in crawl spaces must be extended to the outside. New exhaust ducts must be galvanized metal or rigid PVC.

Floor insulation

All appropriate measures should be taken to establish an effective air barrier at the floor, to prevent air from passing through or around the insulation, prior to insulating the floor.

- R-19 insulation is appropriate in most cases, but NEAT or EA-QUIP must verify the level of floor insulation that is cost effective.
- Insulation should be installed without voids, edge gaps, or end gaps.
- Insulation shall be fitted tightly around cross bracing and other obstructions.

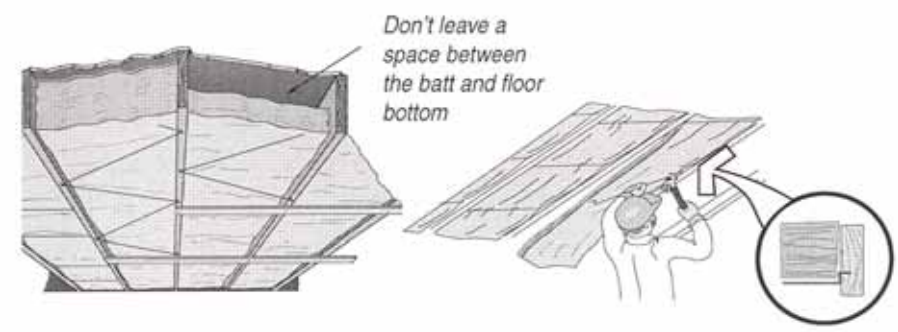

Floor insulating with batts: *Use unfaced fiberglass batts, installed flush to the floor bottom, to insulate floors. The batt should fill the whole cavity if it is supported by lathe or plastic twine underneath. For batts that don't fill the whole cavity, use wire insulation supports.*

- Securely fasten batt insulation to framing with insulation hangers or other supporting material. Insulation must contact sub-floor to prevent convecting air above the insulation from reducing its R-value.
- Faced insulation shall be installed with the facing place up towards to the floor sheathing.
- Ensure that floor insulation is in direct contact with rim joist. If balloon framed, air seal stud cavities prior to installing insulation.

- Insulation must not be installed over knob-and-tube wiring.
- If water pipes protrude below floor joist area, they should be insulated.
- If ductwork protrudes below floor joist area, ducts are to be sealed and insulated.
- It is not necessary for open floor cavities to be completely filled with insulation as determined by the depth of the floor joist. Assure that no air space exists between insulation and sub-floor. Closed cavities shall be completely filled with dense-pack insulation at 3.5 lbs./cu.ft.
- In crawl spaces, install a ground air-moisture barrier that runs up the foundation walls at least 6 inches.
- Consider eliminating foundation vents or making them operable (to be closed in winter).

4.2.7 Foundation Insulation

Extruded polystyrene insulation is the most appropriate insulation for flat concrete or concrete block walls. For rubble masonry walls, use 3-inch or 6-inch-thick, vinyl-faced, metal building insulation.

- R-10 insulation is appropriate in most cases, but NEAT or EA-QUIP must verify the level of floor insulation that is cost effective.
- Interior foundation insulation should be covered with a material that has an ASTM flame spread rating of 25 or less.
- Insulation should be attached to the entire inside wall surface with appropriate fasteners and/or adhesive.
- Install insulation with no significant voids or edge gaps.

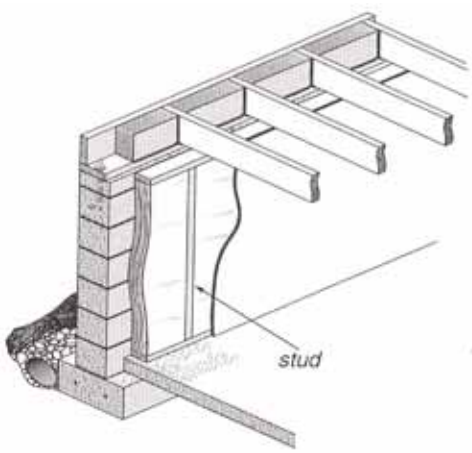

Batts and stud wall: *Insulating occupied basements with fiberglass batts requires building a stud wall. The rim joist must be sealed before it is insulated.*

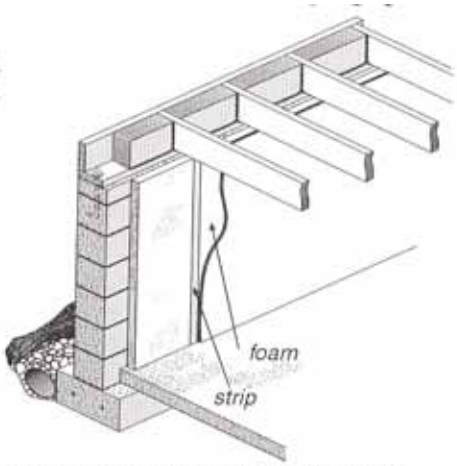

2-inch foam board manufactured with plywood strips: *Insulates this basement. The strips facilitate fastening the foam to the wall and the drywall to the foam.*

- Metal-building insulation should be clamped to the sill plate by a wooden strip, nailed or screwed into the sill.
- If heating system is located in crawl space, precautions must be taken to assure that adequate combustion air is available.
- In crawl spaces, install a ground air-moisture barrier that runs up the foundation walls at least 6 inches. Outside access hatch shall be securely attached to foundation wall. Crawl space access hatch from conditioned space shall be insulated to R-value of foundation walls. A latch, sash lock, gate hook or other device should be installed to provide substantially airtight closure.

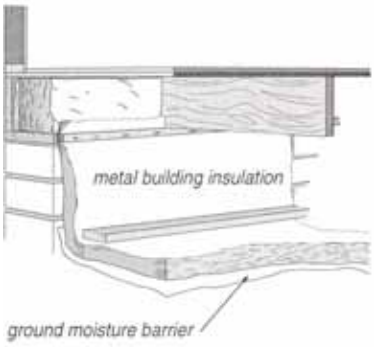

Fiberglass crawl-space insulation: *A vinyl-faced fiberglass blanket, called metal building insulation, can be used to insulate a crawl space. Every crawl space should have a ground moisture barrier.*

Ground moisture and air barriers

The ground is neither an air barrier nor a moisture barrier and can transport air-and-moisture into a crawl space from outdoors. Crawl-space moisture can lead to condensation, mold and rot. Air passing through the soil can contain radon and pesticides. Covering the ground with an airtight moisture barrier establishes an air barrier and seals out moisture and soil gases.

Cover the ground completely with an air-moisture barrier such as 6 mil polyethylene without voids or gaps. Extend air moisture barrier up foundation wall a minimum of 6 inches.

Overlap air-moisture barrier at least 6 inches and seal with construction tape or acoustical sealant.

If the crawl space access is difficult or if the air barrier is at the floor, the polyethylene need not be sealed and is then referred to as a ground-moisture barrier.

Crawl space ventilation

Crawl-space ventilation is generally not required if there are no signs of standing water, the crawl is dry, there is proper surface drainage and there is a properly installed ground air-moisture barrier.

If crawl space ventilation is required, install one square foot of net free ventilation area for every 1500 square feet of crawl space floor area. A minimum of two vents must be installed and should be located on opposite sides of the crawl space.

Rim insulation

Air-seal stud cavities in balloon framed homes before insulating rim. Air-seal other penetrations through rim before insulating. Polystyrene or polyurethane

rigid-board insulation is preferred for insulating the rim-joist area. Fiberglass insulation is less effective than polystyrene or polyurethane. All joints in the rim joist area should be sealed with caulk or foam before insulating with fiberglass batts.

- Insulate rim joist with 2 inches of polystyrene sealed on all sides with one-part foam.
- Polystyrene insulation and the liquid-foam seal should create an airtight insulation block between floor joists, sub-floor and mudsill.
- Longitudinal box sill cavities enclosed by a floor joist may be sealed and blown with wall insulation product unless moisture is present. In moist areas use rigid foam with a liquid-foam seal.

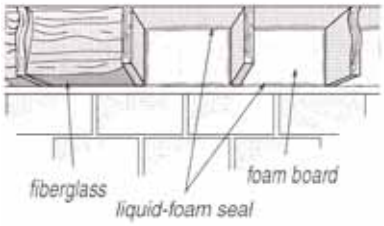

Fiberglass insulated: *Seal the joints with caulking first. Better, insulate the rim joist with foam board cut with adequate clearances to seal edges with liquid foam.*

4.3 Windows and Doors

Windows and doors were once thought to be a major air-leakage problem. However, since the realization that most homes have gaps in the air barrier large enough to put your hand through, window and door air-sealing has been de-emphasized. The application of window measures should be governed by cost effectiveness as determined by the NEAT or EA-QUIP computer audits or similar approved decision-making tools.

Windows' energy efficiency is improved in two primary ways: increasing thermal resistance and reducing air leakage. The limiting factors to the application of these measures are money and time. In the past, window measures – especially storm windows and replacement windows – were overemphasized.

Windows and doors remain very important building elements and their repair or replacement is often essential for a building's survival. However, like any repair measure, window and door rehabilitation should be limited to funds that are dedicated to repair work. All tasks relating to window and door repair should be accomplished using lead-safe weatherization methods.

4.3.1 Exterior Storm Windows

Storm windows are only cost effective if purchased at the right price. If storm windows are to be installed, select metal exterior storm windows with the following qualities.

- Frame should have sturdy corners and not tend to rack out-of-square during transport and installation.
- The gasket sealing the glass should surround the glass's edge and not merely wedge the glass in place against the metal frame.

- Storm-window sashes must fit tightly in their frames.
- The window should be sized correctly and fit well in the opening.
- Storm windows shall be caulked around the frame at time of installation, except for weep holes that shall not be sealed. If weep holes are not manufactured into new storm window, weep holes shall be drilled into them.
- Storm-window sashes must be removable from indoors.

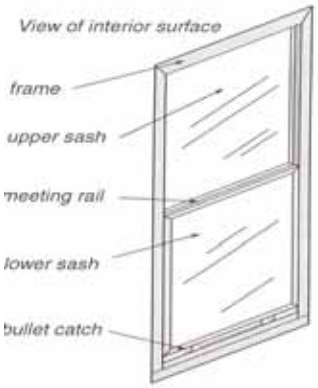

Aluminum exterior storm windows: *Protect the primary window and add about an R-1 to the window assembly.*

- New storm windows must not be used to replace existing storms if the existing storms are in good condition or can be repaired at a reasonable cost.
- Wood storm window inserts should fit neatly within window frame with the appropriate turn buttons, latches or closing hardware.
- Fixed storm windows must not restrict the existing capacity and access required for emergency exits.

4.3.2 Windows Repair and Air Leakage Reduction

With the exception of broken glass or missing panes, windows are rarely the major source of air leakage in a home. Window air-leakage measures are marginally cost-effective.

The measures listed below should be addressed if they are found to be cost-effective by NEAT, EA-QUIP, or another approved decision-making tool. Otherwise, they are repair items, performed to increase building durability. Window repair and weatherstripping should be accomplished using lead-safe weatherization practices.

Repair measures may include the following measures:

- Replace missing or broken glass or glass that is cracked and noticeably separated that affects the structural integrity of the window. Use glazing compound and glazier points when replacing glass. Glass cracks that are not noticeably separated may be neglected.
- To prevent air leakage, condensation, and rain leakage, seal between window frame and other building materials on interior and exterior walls. Use sealants with rated adhesion and joint-movement characteristics appropriate for both the window frame and the building materials surrounding the window.
- Replace missing or severely deteriorated window frame components, such as, stops, jambs or sills. Wood exposed to the weather should be primed and painted.

- Re-glazing window sashes is best accomplished as part of a comprehensive window rehabilitation project. Re-glazing wood windows may not be a durable repair without scraping, priming, and painting.
- Window stops should be adjusted if large gaps exist between stop and jamb. Ensure that window operates smoothly following stop adjustment.
- Large gaps between sash and sill and sash and stops may be weatherstripped. Meeting rails may also be weatherstipped or planed. Window weatherstripping is typically not cost effective but may be installed to solve a comfort problem.
- Replace/repair missing or non-functional top and side sash locks, hinges or other hardware if such action will significantly reduce air leakage.

Avoid expensive or time-consuming window-repair measures, implemented to solve minor comfort complaints.

Weatherstripping double-hung windows

Wooden double-hung windows are fairly easy to weatherstrip. Window weatherstripping is mainly a comfort retrofit and a low weatherization priority. However, wooden double-hung windows are so common in the Mid-Atlantic Region that some retrofitting tips follow.

Paint is the primary obstacle when weatherstripping double-hung windows. Often the upper sash has slipped down, and is locked in place by layers of paint, producing a leaking gap between the meeting rails of the upper and lower sashes. To make the meeting rails meet again, either break the paint seal and push the upper sash up, or cut the bottom of the lower sash off to bring it down.

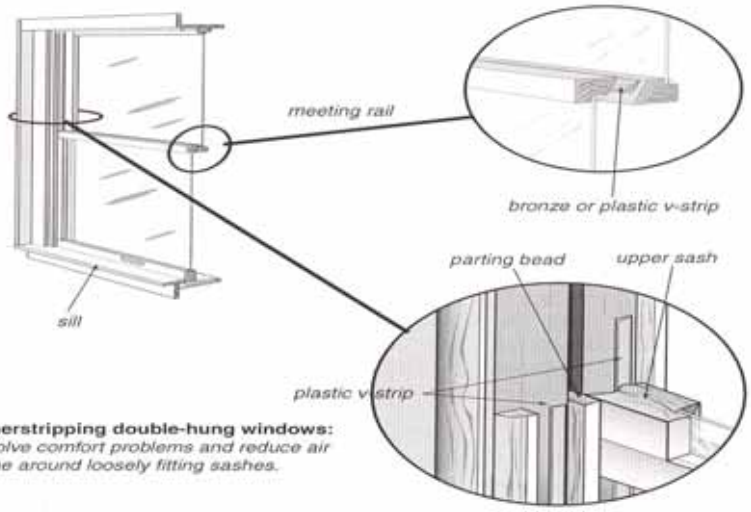

Weatherstripping double-hung windows: *Can solve comfort problems and reduce air leakage around loosely fitting sashes.*

To lift the upper sash, cut the paint around its inside and out side perimeter. Use leverage or a small hydraulic jack to lift the sash. Jack only at the corners of the sash. Lifting in the middle will likely break the window. Block, screw, or nail the repositioned upper sash in place.

To weatherstrip the window, you must remove the lower sash. Cut the paint where the window stop meets the jamb so the paint doesn't pop off in large flakes as you pry the stop off. Removing one stop is sufficient to remove the bottom sash.

Scrape excess paint from the sashes and the window sill. You may need to plane the sides so the window operates smoothly. Apply vinyl V-strip to the side jambs, and bronze V-strip to the meeting rail on the top sash. The point of the bronze V goes skyward. The weatherstrip is caulked on its back side and stapled in place, as shown in the illustration.

Window replacement

Window replacements are generally not cost-effective energy conservation measures. Replace windows only as emergency repair measures when the window is missing, or damaged beyond repair, or found to be cost-effective.

Replacement windows should have a window unit U-value of 0.40 or less as rated by the National Fenestration Rating Council (NFRC) or approved equal.

4.3.3 Door Measures

Door measures are usually not cost-effective unless they have a very low cost. Doors have a small surface area and their air leakage is more of a localized comfort problem than a significant energy problem most of the time. However, door operation affects building security and durability, so doors are often an important repair priority.

Door weatherstrip, thresholds and sweeps

Door weatherstrip, thresholds and sweeps are marginally cost effective. These measures may be addressed if they are found to be cost effective.

Before installing weatherstripping, remove old weatherstrip. Tighten door hardware and adjust stops so door closes snugly against its stops.

Use a durable stop-mounted or jamb-mounted weatherstrip material to weatherstrip the door. New weatherstrip must form a tight seal (no buckling or gaps) when installed. Door should close without rubbing or binding on the stops and jambs, especially in homes that may have lead paint. Doors that rub and crush paint on their jambs create lead dust.

Thresholds and door sweeps are installed to prevent infiltration and should not bind the door. Thresholds should be caulked at the sill and jamb junction.

Door replacement

Door replacements are rarely cost-effective energy conservation measures. Replace a door as an emergency repair, when the door is damaged beyond repair. Tight uninsulated doors in good condition should not be replaced with insulated doors.

Observe the following standards when replacing exterior doors:

- All replacement doors must have a solid wood core or an exterior-grade foam core. Replace the door using a solid core or insulated door-blank or a pre-hung steel insulated door. Replacing an exterior panel door with another panel door is not allowed. All replacement doors must have three hinges.
- Replacement door should not have glass panes. If the homeowner is persistent, install smallest glass pane as possible or a door viewer.

Door repair

Door repair items improve home security and building durability.

- Replace missing or inoperable locksets.
- Reposition the lockset/strike plate.
- Install a modernization kit so that the door can be held in a tightly closed position.
- Reposition stops if necessary.
- Seal gaps between the stop and jamb with caulk.

Storm doors

Storm doors are expensive per square foot of area and most weatherization programs don’t install them because all of the common measures described here are considerably more cost effective. Storm doors can damage steel-insulated doors by causing them to overheat.

5.0 MULTI-FAMILY BUILDING ADMINISTRATION

5.1 General

5.1.1 Prior Approval

No multi-family project may commence without the prior written approval of the project from DCEO.

5.1.2 Eligibility

Weatherization work shall be performed in the entire building provided the building is qualified based on applications that meet RCAP's 66-2/3 percent eligibility guideline. However, DOE offered flexibility by adding certain eligible type of large multi-family buildings to the list of dwellings that are exempt from the 66-2/3 percent requirement. In these large multi-family buildings, as few as 50 percent of the units would have to be certified as eligible before weatherization. This exception would apply only to those large multi-family buildings where an investment of DOE funds would result in significant energy efficiency improvement because of the upgrades to equipment, energy systems, common space, or the building shell.

5.2 Expenditure Level/Budgeting

a. **Landlord Contribution:** Landlords must contribute at least 25 percent of the cost of the work.

b. **Cost Effectiveness:** Only Energy Efficiency Measures (EEM) with a SIR of 1.0 or greater may be performed. However, if the SIR is less than 1, the owner has the option to buy down in order to bring the SIR to 1.0 or greater.

5.3 Provider Method

a. **EA-QUIP:** All work must be cost-justified using the EA-QUIP auditing tool.

b. **Certified Personnel:** A person certified to use the EA-QUIP auditing tool must perform the inspection of the building.

c. **All Energy Efficiency Measures Evaluated:** All applicable EEMs specified in the audit must be evaluated and performed.

d. **Order of Performance:** EEMs must be performed in order of their cost effectiveness, from highest to lowest SIR.

5.4 Tasks and Analysis for Preparing the Report

5.4.1 Energy Consumption and Facility Data

The auditor shall thoroughly evaluate energy, water and sewage costs and consumption, demand and time-of-use data in order to properly evaluate the economics of specific energy efficiency measures and to formulate an accurate energy/demand baseline. The baseline shall be weather-normalized using a heating degree-day adjustment factor and shall be based on at least 12 months, but preferably 2 years of utility data.

5.4.2 Inventory Existing Systems and Equipment

The auditor shall compile and deliver an inventory based on a physical inspection of the major electrical, plumbing, HVAC and other mechanical systems, as well as building shell systems including:

a. Cooling and cooling distribution systems and related equipment.

b. Heating and heat distribution systems.

c. Automatic temperature control systems and equipment.

d. Outdoor ventilation systems and equipment.

e. Exhaust systems and equipment.

f. Domestic hot and cold water systems.

g. Electric motors, transmission and drive systems.

h. Interior and exterior lighting.

i. Water usage equipment.

j. Rated and performance insulation values at walls, floors, and attics.

k. Estimated natural infiltration rate for all buildings.

5.4.3 Inventory Data

The auditor shall evaluate the following data for performing the inventory:

a. The actual loads, equipment sizing, operating efficiency, and hours of operation for each system.

b. A list of major air leakage sites and description of how natural infiltration was estimated.

c. Current operating condition for each system.

d. Remaining useful life of each system (exclusive of premature equipment failure).

e. A catalog of current indoor air quality and comfort problems in the buildings.

f. An evaluation of feasible replacement/upgrades to address the efficiency, indoors air quality and comfort concerns that were identified.

5.4.4 List Energy Efficiency Measures

The auditor shall:

a. **Perform Diagnostic Testing:** Perform diagnostic testing on equipment. These tests shall include combustion appliance zone testing for backdrafting potential:

   i. Standard and worst-case draft testing.

   ii. Combustion efficiency analysis.

iii. Ambient carbon monoxide and flue-gas testing.

b. **Identify EEMs:** Identify potential EEMs for installation or implementation at the building, including potential solutions for indoor air quality and comfort concerns.

6.0 HIGH-RISE/CENTRALLY HEATED MULTI-FAMILY INSPECTION

6.1 General Information

6.1.1 EA-QUIP Inputs

Determine the following inputs for use in the EA-QUIP audit. Where the data is listed, use only that value for the audit.

a. Maximum expenditure ($).

b. Economic time horizon (years).

c. Real discount rate (%).

d. Space heating energy type.

e. Domestic hot water energy type.

f. Consider switching to gas.

g. Actual heating degree-days (degdays)

h. Actual yearly energy use (gal/ccf/kWh).

i. Actual base energy use (gal/ccf/kWh).

j. Actual yearly electricity use (kWh).

k. Energy price per unit ($/gal/ccf/kWh).

l. Heating energy price escalation rate (%).

m. Electricity price ($/kWh).

n. Electricity price escalation rate (%).

6.1.2 General Required Information

Collect the following general information. See the EA-QUIP instruction manual for specific requirements or allowable answers for each field.

a. Dwelling ID/location.

b. City for weather data.

c. Terrain.

d. Shielding.

e. Ground surface.

f. Number of heated floors.

g. Average heated space per floor (sqft).

h. Ceiling height (feet).

i. Dwelling mass.

j. Average public space per floor (sqft).

k. Type of public lighting.

l. Average public wattage per floor (watts).

m. Cooling equipment.

6.2 Air Leakage Measurements

6.2.1 Blower Door Information

Collect the following information concerning the blower door measurements (where applicable):

a. Infiltration measured.

b. Mechanical ventilation.

c. Blower door type.

d. Pressurization/depressurization.

e. Inside temperature (degf).

f. Outside temperature (degf).

g. Low-flow ring installed.

h. A or B ring installed.

i. Test number.

j. House pressure (pa).

k. Fan gauge (pa or cfm).

l. Flow (cfm).

m. Flow goal (cfm).

6.3 Distribution System

6.3.1 Type of Distribution System

A. Steam

   a. 1-pipe steam w/o vents.

   b. 1-pipe steam w/vents.

   c. 2-pipe steam w/o vents.

   d. 2-pipe steam w/vents.

   e. Number of risers.

   f. Number radiator/riser valves to be replaced.

   g. Condition of master vents to be replaced.

B. Other types

a. Hot water.
b. Forced air.
c. Gravity air.
d. In-room.

6.3.2 Pipe Insulation

a. Total uninsulated pipe/duct length (ft)
b. Average uninsulated pipe/duct diameter (in)

6.3.3 Controls

A qualified engineer or technician must determine the type of heating controls or thermostatic valves and note the following:

a. Outdoor temperature sensor.
b. Indoor thermostat(s).
c. Thermostatic valves.
d. Outdoor and indoor temperature sensors.
e. Outdoor sensor/bad indoor sensor.
f. None.

A qualified engineer or technician must determine the condition of sensor/controls. Inspect and determine the each of the following:

a. Modulating aquastat.
b. Heating day thermostat setting (degf).
c. Heating night setting (degf).
d. Percent of dwelling out of balance (%).
e. Average out-of-balance temperature (degf).
f. Location of imbalance.

6.4 Domestic Hot Water

6.4.1 Occupant Information

Inspect or determine the following:

a. Average daytime occupants in dwelling.
b. Average nighttime occupants in dwelling.
c. Total daily hot water use (gal/day).
d. Number of showers.
e. Type of shower heads/flow restrictors.

6.4.2 Water Heater Type

Determine the water heater type:

a. Gas, no insulation.
b. Gas, insulated.
c. Gas, insulated w/storage.
d. Oil, no insulation.
e. Oil, insulated.
f. Electric, no insulation.
g. Electric, insulated.
h. Propane heater.
i. Tankless coil.
j. Heat Pump.

6.4.3 Other Information

Determine/inspect for the following:

a. Consider separate hot water heater.
b. Estimated summer efficiency (%).
c. Hot water temperature (degf).
d. Total length of uninsulated hot water pipe (ft).
e. Average hot water pipe diameter (in).

6.5 Appliances

Determine the number and type of each of the following:

a. Dryer type.
b. Stove/oven type.
c. Typical refrigerator type.
    1. Manual defrost and freezer.
    2. Automatic defrost and freezer.
    3. Manual defrost and separate freezer.
    4. Automatic defrost and separate freezer.
    5. None.

6.6 Lighting

6.6.1 Incandescent Lamps

Determine the incandescent watts/unit to be replaced by compact fluorescent lamps (CFLs). CFLs have the following advantages over incandescent light bulbs when used properly: they last up to 10 times longer, use about 1/4 the energy, and produce 90% less heat, while producing more light per watt. For example, a 27-watt compact fluorescent lamp provides about 1800 lumens, compared to 1750 lumens from a 100-watt incandescent lamp.

The following is a comparison between the wattage of commonly available incandescent lamps and the wattage of a CFL that will provide similar light levels:

25 Watt Incandescent = 5 Watt CFL
50 Watt Incandescent = 9 Watt CFL
60 Watt Incandescent = 15 Watt CFL
75 Watt Incandescent = 20 Watt CFL
100 Watt Incandescent = 25 Watt CFL
120 Watt Incandescent = 28 Watt CFL
150 Watt Incandescent = 39 Watt CFL

6.7 Refrigerator Replacement

6.7.1 Survey Existing Appliances

An approved audit tool must be used to demonstrate the cost-effectiveness of a refrigerator replacement. Note the location and meter the wattage of the existing refrigerator for at least 2 hours or use the existing NEAT database to demonstrate cost-effectiveness. A minimum of 10% of the refrigerators replaced must be metered.

6.7.2 Replacement Refrigerators

Additional guidance for refrigerator replacement is detailed below:

- Only new, top freezer models may be installed. New replacement units may <u>not</u> have through-the-door ice or water service since this feature increases energy use. The replacement refrigerator should be similar in capacity to the one being replaced, where practical. White is the only color that will be available under RCAP. All replacement refrigerators must meet the UL 250 (1993) standard.
- The replacement refrigerator must be an Energy Star® designated energy efficient product and, as with all measures installed, result in a savings-to-investment ratio (SIR) of 1.0 or greater. To lower costs, replacement refrigerators should be obtained through bulk purchasing agreements, where possible.

- All refrigerators that are replaced must be removed from the clients' premises upon delivery of the replacement to ensure it does not find its way back into the electric grid. The refrigerator must be properly disposed of in accordance with the environmental standards in the Clean Air Act (1990) Section 608, as amended by Final Rule, 40 CFR 82, May 14, 1993, thus preventing refrigerants from entering the atmosphere.

Electrical Requirements:

- The electrical outlet shall provide the voltage specified on the ID plate of the new refrigerator and be located within reach of the refrigerator without the use of an extension cord.
- The outlet and cover plate shall be in good condition with nothing visibly wrong (e.g., not cracked or broken, no sparks, no smoke burn marks, etc.).

Structural Requirements:

- Location shall meet refrigerator manufacturer's specifications for space and clearance.
- The floor must be level and structurally adequate to properly support the new refrigerator.
- Doors and hallways in the dwelling must be sufficient to allow for removal of the existing refrigerator and installation of the new one.

The contractor/refrigerator vendor shall:

- Notify the client as soon as possible of the delivery date and time so that the client
  - Is available at that time.
  - Is informed that it will be easier to transfer food if they don't shop right before the new refrigerator is installed.
  - Is prepared to clean behind the old refrigerator before the new one is installed.
- Deliver and install the new refrigerator.
- Level the unit to ensure proper operation.
- Ensure the door hinges are on the appropriate side.
- Set temperature controls appropriately.
- Instruct the customer on refrigerator operation.
- Deliver warrantees, operating manuals and vendor contact information to the customer.
- Remove all packing materials from the client's premises.
- Remove the old refrigerator from the client's premises.

- Properly dispose of the old refrigerator.
- Provide normal back-up service for the new refrigerator.

6.8 Above-Grade Walls

6.8.1 General information

For each above-grade wall, inspect for or determine the following:

a. Name of wall.

b. Wall orientation.

c. Azimuth of north face (degrees).

Note: Azimuth is the compass direction the house faces. It is used to calculate the solar energy that falls on each window and wall. Depending on the house orientation, enter:

a. 0 if the north wall of the house faces exactly north.

b. 10 if it faces 10 degrees east of north.

c. -20 if it faces 20 degrees west of north.

d. And so on, up to 45 or down to –45.

6.8.2 Wall Type

Allowable response for wall type:

a. 2x2 wood

b. 2x3 wood

c. 2x4 wood

d. 2x6 wood

e. 8” concrete and brick

f. 8” brick

g. 12” concrete

h. 12” concrete and brick

i. 12” brick

j. Block and brick

k. Block; cavity and brick

l. 8” brick and air space

m. Shared w/garage

6.8.3 Wall Insulation

a. Insulatable wall thickness (in)

b. North wall area (sqft)

c. East wall area (sqft)
d. South wall area (sqft)
e. West wall area (sqft)
f. Air leakage through the wall
g. Area of any hole in wall (sqin)

6.9 Windows

6.9.1 General Information

For primary, rooftop, or other windows, inspect or determine the following:

a. Name of window
b. Window orientation
c. Window type
d. Number of glazings
e. Curtains and blinds
f. Allowable response for curtains and blinds:
    1. None
    2. Drapes
    3. Shades or blinds
    4. Curtains and shades
    5. Outside shutters
    6. Shades and shutters
    7. Curtains, shades and shutters
g. Average sash fit
h. Physical condition of frame
i. Cracks between frame and wall
j. Area of any holes in windows (sqin)
k. Window area (sqin)
l. Number of:
    1. North windows
    2. East windows
    3. South windows
    4. West windows
m. December solar exposure

1. East (%)
2. South (%)

6.10 Exterior Doors

6.10.1 General Information

For entrance, rooftop, basement, storm doors, vestibule or other doors, inspect for or determine the following:

a. Door type: allowable response for door type
    1. Plain (hinged)
    2. Sliding
    3. French
    4. Hatched
    5. Fixed
b. Door material: allowable responses for door material
    a. Wood solid core
    b. Wood hollow core
    c. Hollow metal
    d. Glass w/metal or wood frame
    e. Steel (solid)
    f. Steel w/mineral fiber core
    g. Steel w/urethane foam core
    h. Steel w/polystyrene core
c. Door fit
d. Door area (sqft)
e. Approximate glass area

6.11 Attic/Roof

6.11.1 Attic/Roof Information

Inspect for and determine the following:

a. Roof type: allowable responses for roof type
    1. Flat roof
    2. Unfinished attic
    3. Finished attic
    4. Pitched roof

b. Insulation type: allowable responses for insulation type
    1. No insulation
    2. User-specified R-value
    3. Fiberglass batts
    4. Fiberglass loose
    5. Fiberglass boards
    6. Cellulose fill
    7. UF-foam
    8. Polyurethane boards
    9. Rock wool
    10. Polystyrene boards
    11. Vermiculite fill
c. Insulatable air space (in)
d. Roof area (sqft)
e. Number of rooftop windows
f. Number of rooftop doors
g. Number of leaking penetrations
h. Water leakage through roof
i. Portion of roof to be replaced (%)
j. Roof top material: allowable responses for roof top material
    i. Asphalt shingles or sheeting
    ii. Built-up
    iii. Metal
    iv. Rubber
    v. Slate
    vi. Tar and gravel
    vii. Wood shingles
    viii. Spanish tiles
k. Roof color

6.12 Basements

6.12.1 Basement Information

Inspect for and determine the following:

a. Basement type:
    1. Basement
    2. Crawlspace
    3. Slab-on-grade
    4. Platform
b. Basement insulation: allowable response for base insulation
    1. No insulation
    2. Fiberglass batts
    3. Fiberglass loose
    4. Fiberglass boards
    5. Cellulose fill
    6. UF-foam
    7. Polyurethane boards
    8. Polystyrene boards
    9. Vermiculite fill
c. Floor area (sqft)
d. Number of floor penetrations
e. Base wall insulation
f. Above-grade height (ft)
g. Exterior perimeter (ft)
h. Number of windows
i. Number of doors
j. Number of leaky penetrations
k. Air leakage through base
l. Area of windows to be sealed (sqft)
m. R-value of window seal (°F-sqft-hr/Btu)